D6 Space Ships

WEST END GAMES

D6 SPACE SHIPS

DESIGN
Shawn Carman, Steven Marsh, Peter Schweighofer, Gareth-Michael Skarka, Nikola Vrtis

ADDITIONAL MATERIAL
Shane Lacy Hensley, Dave Pilurs, Ed Stark

EDITOR
Nikola Vrtis

COVER ART
Aaron Nakahara

COVER GRAPHIC DESIGN
Eric Gibson

INTERIOR GRAPHIC DESIGN
Nikola Vrtis with Eric Gibson

PUBLISHER
Eric Gibson

SPECIAL THANKS TO
Rachel Gibson, Steve Long, Steven Marsh, MaryLou and Kalini Bruckel, Bill Vrtis, Jeremy Vrtis, Ladislav Vrtis

INTERIOR ILLUSTRATIONS
Marshal Andrews III (17, 82, 88), David Deitrick (10, 33, 43, 90), James Dunn (art border, 61, 62–top), Marcio Fiorito (8, 24, 65, 79, 84), Jaime Lombardo & Ron Hill (71), Aaron Nakahara (1, 21, 29, 35, 39, 45, 49, 50, 51, 67, 86), Dave Pilurs (52, 53, 54, 55, 56, 57, 58, 59, 60, 62–bottom), Brian Schumburg (7, 73), Philip Tan (3)

D6 SPACESHIPS PLAYTEST TEAM
Raymond Croteau (with Tim Morgan), Mark Leary, Rodney Leary, Kevin MacGregor (with Shari MacGregor and Greg Nagler), Pyramid magazine (www.sjgames.com/pyramid) playtest respondents (Glen Barnett, Frederick Brackin, John Buston, Douglas Cole, Brandon Cope, Erik Manders, Thomas Schoene, Jonathan Souza, Tall Will, Christopher Thrash, Eric Ueber); contributors to the West End Games Discussion Boards and RPG.net Forums … and their groups, friends, and accomplices. Thank you for the use of your imaginations and your time.

For free support (including downloadable worksheets and templates), information about books for this game system and other WEG systems, links to fan sites, details on licensing this system, and much more, visit our Web site at www.westendgames.com!

WEG 51017 > Version 1.0 > ISBN 1-932867-07-4 > First Printing February 2005

Accessing D6 Space Ships File 0A ...

Contents _

Introduction _

The galaxy's calling to you. Ancient artifacts to find, untouched worlds to explore, raiders to defeat, military to outwit.

Got a craft to travel the depths of space? Then start in chapter 1, "Travel and Combat." In this section, you'll get details, including game mechanics, on what happens in inhabited systems. You'll find out about chartering a ship (in case yours breaks down), how the law might deal with you, and how to handle your ship in a fight.

Should you be looking to upgrade or replace your ship — or you need to get a new one — go for the custom model and create your own with chapter 2, "Revised Ship Design." With greater flexibility, this chapter offers three related ship design guidelines, more modules, more weapons, and more options. Follow all of the steps for detailed ship creation, or use the information as inspiration for your own freeform ships.

If those options aren't enough, chapter 3, "Quirky Ships," shows you how to include Disadvantages, Advantages, and Special Abilities in your vessel to make it truly unique. (Gamemasters may also find this section helpful for adding flavor to used ships that the players' characters want to purchase.)

Chapter 4, "Example Ships," gives well over a dozen different basic ships, including sample images and examples for each type of ship design guideline. You can use them as they're presented, or modify them to suit your needs.

Of course, with a ship, you need something to do with it. In chapter 5, "Adventures in Space," you'll find out just what's waiting for you. There're tons of adventure seeds, plus details on gearing campaigns toward specific types of characters, including pirates and the military. If you're not sure what kind of ship you want, this is a great place to get some ideas.

Chapter 6, "Planet Creation," supplements chapter 5 and provides gamemasters with the means of quickly creating planets for their players' characters to explore.

For those who'd like to add space travel to their *D6 Adventure* games, chapter 7 includes a conversion between that genre and *D6 Space*.

The book ends with a handful of templates, including one for advanced ship design, one for freeform ship design, and one for planet creation.

Though broad in its scope, this book is slanted toward the space opera subgenre, but gamemasters may include equipment restrictions, additional action modifiers, and other details as appropriate for their setting.

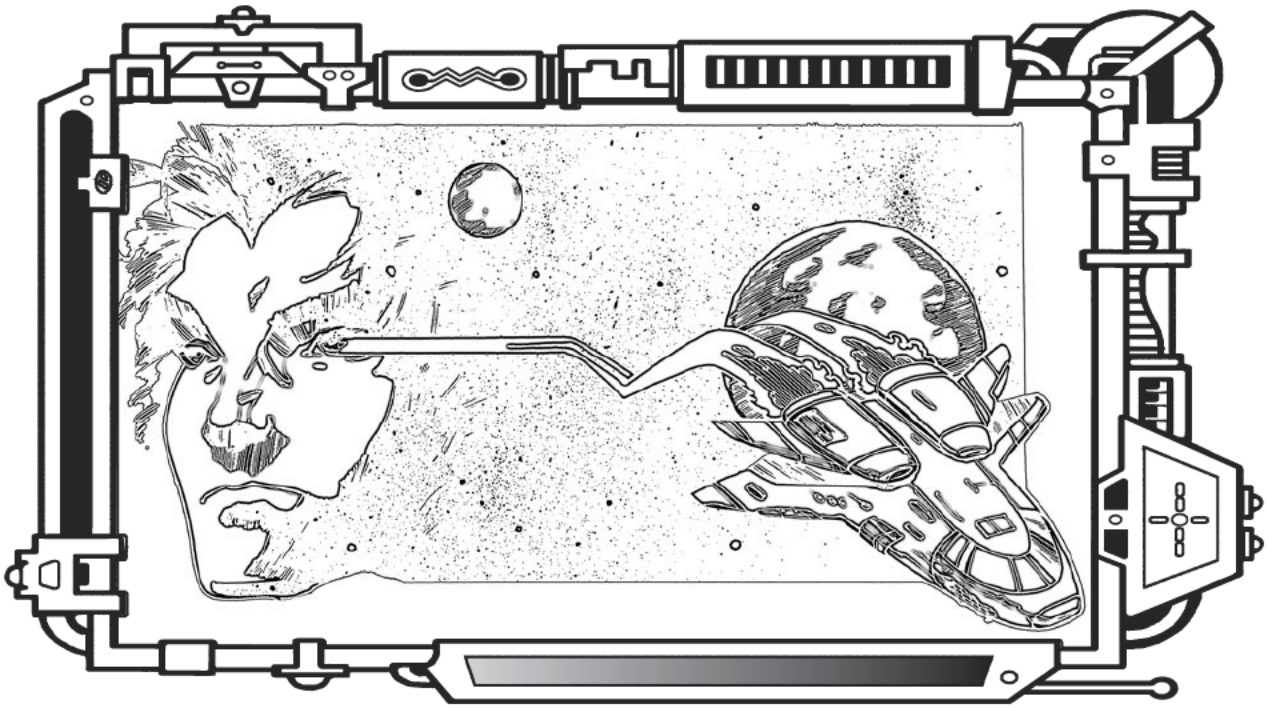

Travel and Combat _

What's in this Chapter

This chapter contains information on getting around the galaxy and game rules to guide gamemasters in simulating many situations that arise aboard spacecraft.

Galactic Travel

Getting around the galaxy presents a major challenge in space campaigns. Unless characters stick it out dirtside on one planet the entire story arc, they'll eventually need some transport off world. Some campaigns revolve around space travel, while others simply use it to convey heroes from one adventure setting to another. Spaceships provide a means of journeying from one system to another. They can enable or limit mobility depending on their availability and the heroes' funds. The following sections cover various means by which characters might engage in galactic travel.

Your Own Ship

Characters prefer having their own ship. This increases their mobility in pursuing profit, exploring new worlds, and fleeing adversaries. It encourages freedom of activity and offers more options throughout the campaign.

Unfortunately spacecraft ownership comes with its own burdens: vessels cost vast amounts of money, repairs are expensive, and the investment is constantly at risk. Often the action revolves more around keeping the ship operational than achieving other story objectives. Before handing heroes a starship, gamemasters should choose the circumstances surrounding their acquisition of a vessel. How characters obtain their own craft affects the rest of the campaign, establishes their motivations, and determines their adversaries and allies.

Purchase: The heroes somehow have enough credits to outright purchase a small, lightly armed vessel, with no debt to anyone other than galactic lending institutions. They must still earn enough money to pay for its operation, and they must determine how to use it to further their own goals.

Repair Project: Someone managed to save up to buy a junk ship, then spent every credit and spare hour working to repair it as a labor of love. Although it's barely operational, the systems constantly break down and require an unceasing flow of credits, maintenance, and replacement parts. Every adventure a different system goes offline, and the characters must earn more credits for repairs.

Inheritance: A relative bequeaths a vessel to a character, possibly with strings attached (avenge an old wrong, destroy an enemy, win a race, find a lost possession, discover and name a new planet). An additional monetary inheritance might cover operational expenses, or the heroes might have to put the ship to work earning credits to pay for fuel and maintenance.

Wealthy Patron: A rich eccentric gives the heroes a craft. Gamemasters should determine whether the patron requires the characters to undertake some task or fulfill some nonmonetary obligation to retain possession of the vessel (see the suggestions under "Inheritance"). He may occasionally require them to transport him to obscure and dangerous regions of the galaxy to pursue his own mysterious agenda.

Corporate Craft: The characters work for a small shipping company, transport line, or other business that allows them to operate a spacecraft for corporate purposes. Although the company pays most justifiable expenses, the heroes must dodge aggressive corporate competitors and pirates. Can these heroes achieve their own goals (even if simply staying out of trouble) with a ship that really isn't theirs?

Loan Shark: To purchase their ship, the characters borrowed money from a less-than-legitimate lending institution — a wealthy but corrupt executive, seedy entrepreneur in dubious industries, or politician with funds to bankroll his secret agenda — with no qualms about roughing up debtors. Although the heroes have some freedom in using their ship (and earning enough money to pay off the loans used to buy it), they often find themselves pressured to undertake devious assignments for their lending patrons.

Crime Syndicate: The characters gain their ship through association with a criminal organization. This variation combines the worst parts of flying a corporate craft and using funds from a loan shark. Perhaps the characters borrowed money from a crime boss and must earn each payment under pressure of unpleasant reprisals. They might actually work for the syndicate (much as if they had a corporate craft), undertaking smuggling runs, dealing in illegal goods, and dodging authorities.

Shipjacking: Truly desperate characters might steal their own vessel, usually during an adventure centering on the theft.

It's My Ship! _

Sometimes a starship owner starts insisting on doing things her way just because she owns the vessel. She makes decisions based on the safety of the ship and its profitable operation rather than the desires or motivations of her crew and the course of the campaign.

Give other characters some kind of leverage, something the entire group needs so everyone becomes involved in the craft's well-being: ready cash to effect repairs the captain can't afford on her own; engineering expertise to jury-rig repairs on the spot; contacts required to fulfill the next part of the journey.

Gamemasters worried about this power struggle before a campaign begins can give the heroes a ship that requires one component from each character — a key card, authorization chit, circuit breaker — to engage the craft's ignition. Operation stations (pilot's controls, sensors, fire control, shields) could require a security handprint scan, each one keyed to a different character.

As a last resort, gamemasters can remind an owner of her ship's value by seriously damaging the vessel or taking it away (temporarily, of course). To repair or reclaim it, the captain needs the help of the entire crew.

Emphasize that every crewmember, whether or not they own shares in a vessel, contributes to the group's survival.

Besides struggling to pay for fuel and maintenance, the outlaws must also constantly flee law enforcement officials and the ship's original owners while pursuing their own objectives.

Assembling the Crew

If characters are flying their own ship, they need a crew. These personnel often include the heroes, sometimes augmented with a few gamemaster's characters.

Character Generation: If the players know the campaign centers around space travel aboard someone's ship, they might generate characters ideally suited for such duty. This works especially well if they all have the same interests in mind: they're all stationed aboard the same gunship, they work for the same shipping company, they all owe allegiance to the same crime boss. Players should discuss and decide who should serve as captain and co-pilot, engineers, gunners, electronics experts, and any other specialists required to operate the craft's systems. Then they can customize their characters according to their duties.

Gamemaster Improvisation: Sometimes players have their own ideas for characters, don't realize how much space travel the campaign involves, or don't coordinate their characters during creation. The gamemaster must often improvise to explain why they possess a ship, who owns it, what they all do on it, and why they're sticking with this motley crew anyway. Obviously anyone with piloting experience has reason to own a vessel, but why would a mercenary, scientist, or street thief bother signing on? Gamemasters can make up such motivations: the mercenary agrees to work as a gunner in return for passage back to his unit, the scientist offered to upgrade some electronic systems to study some interstellar anomaly, and the street thief stowed away while fleeing authorities. Such explanations are best conveyed during character introductions before the opening scenario begins. Along the way the obstacles they face cement their relationships and reinforces their dependence on quick transport aboard their shared vessel.

Scenario: Build hiring a crew into the campaign — a good option if acquiring the ship takes an entire adventure. This could serve as a means to explain how disparate characters came together, or how a crew was carefully selected from qualified applicants. Sometimes everyone's just thrown together in the heat of a crisis in which the ship is their only avenue of escape. Perhaps the captain assembles a crew not only to fly a ship, but to actually steal one in the subsequent adventure.

Passenger Liners

Most people throughout the galaxy travel by starliner. These massive capital ships serve as space-borne hotels, transporting thousands of people between major destinations within and between sectors. Luxury liners even bring tourists from mainstream systems to exotic and remote worlds.

Most liners impose severe restrictions on travel. Passengers may only board and disembark at predetermined ports according to a set schedule. Customs and security officials subject everyone (including the crew) to tariffs and inspections, taxing materials brought aboard for export and confiscating most personal weapons (beyond those limited to inflicting stun damage). Passengers cannot bring more than a limited amount of personal baggage (though this might be substantial) — space in the cargo bay often requires additional and exorbitant fees.

Even the most austere liners offer basic comforts: private cabins (some with up to four berths; others with entire staterooms and suites), dining room, and passenger lounge. More luxurious amenities include domed observation decks, recreation halls, shopping complexes, live entertainment, opulent restaurants, and casinos.

Starliner Prices _

Difficulties and Modifiers _

Credits listed are examples; gamemasters should adjust them to better reflect availability in their own settings.

Vessel	Price Difficulty (Credits)
No-frills liner	Moderate (400)
Standard liner	Difficult (4,000)
Luxury liner	Very Difficult (8,000)
Condition	**Difficulty Modifier (Credits Adjustment)**
Major destination	-5 (-50%)
Remote destination	+5 or more (+50% or more)
Require extra cargo space	+10 or more (+100% or more)

Chartered Ships

Sometimes characters can afford to charter passage aboard a craft going in their direction. These vessels aren't dedicated passenger liners, so they can't offer all the amenities, but they can accommodate several noncrewmembers in spare personnel quarters, berths, or cabins. Sometimes they must jump to several different systems before reaching their final destination, based on the ship's original itinerary. Less legitimate forms of transportation may tarnish the reputation of characters who associate with smugglers, criminals, and free traders.

Characters cannot "charter" an official military vessel; these ships provide transport only to active duty military personnel or high-ranking government officials.

Several kinds of spacers tend to accept charters on their craft. Star merchants are obviously more likely to take on passengers than a band of pirates, which would rather strip them of valuables and send them on their way. Use these samples and the "Charter Passage" table as guidelines for determining specific transport situations in campaigns.

Smuggler Freighter: Smugglers often pose as semi-legitimate freighter or transport captains. They take on passengers for charter flights for exorbitant sums, often because they need quick cash for repairs, debts, or unexpected expenses incurred during their more dubious activities. Conditions often include no questions asked, and an assumption that everyone prefers to avoid the authorities. Accommodates are sparse, often consisting of the captain's own cabin, or berths usually reserved for holding spare cargo. Such trips often lead to confrontations with the law, bounty hunters, and powerful crime syndicate minions. If spotted with a smuggler captain or a wanted ship, the passengers may be associated with criminal activities and gain unwanted attention.

Charter Prices _

Difficulties and Modifiers _

Credits listed are examples; gamemasters should adjust them to better reflect availability in their own settings.

Vessel (Credits)	Price Difficulty
Smuggler freighter	Difficult (4,000)
Free trader	Difficult (4,000)
Crime syndicate transport	Moderate (plus favor) (400 plus favor)
Corporate freighter	Very Difficult (8,000)
Private charter vessel	Very Difficult (8,000)
Condition	**Difficulty Modifier (Credits Adjustment)**
Friendship with captain	-7 (-70%)
Affiliated with group	-5 (-50%)
Several layovers acceptable	-5 (-50%)
Require direct route	+5 (+50%)
Characters look suspicious	+5 (+50%)
Characters wanted by law	+10 (+100%)

Free Trader: Many small-time, legitimate traders need extra money and take on passengers heading in the same direction as their cargo. Characters going to nearby destinations often pay an extra fee for the pilot to divert from his primary course. Travelers share the captain and crew's living quarters, though some small freighters have one or two basic passenger cabins. Such vessels have few troubles with the law, though they often fall prey to pirates, competing merchants, and more aggressive corporate freighters. The nature of the cargo might also attract trouble.

Crime Syndicate Transport: Although agents of criminal organizations prefer more discreet means of travel between planets, they sometimes require dedicated vessels: medium-sized freighters for hauling large, illegal cargoes; light gunships for defending their interests; and transports for moving bounty hunters, mercenaries, and other personnel. Passenger accommodation varies according to the vessel's profile, though it most certainly involves exposure to the surly crew and often gruff personalities working for such an outfit. Characters involved with a crime syndicate (or brave enough to approach one) might gain passage on such a transport, though payment often includes fulfilling unspecified "favors" to the organization at some later time. Although crime bosses operate much more discreetly than smugglers and other small-time, space-faring criminals, the characters still run some risk of becoming embroiled with the syndicate's enemies, such as law enforcement officials and rival gangs.

Corporate Freighter: Some captains commanding freighters in corporate fleets make some spare credits on the side by accepting passenger fares, assuming that the characters don't have reputations as notorious trouble-makers, pay up front, and are going to one of the vessel's ports of call. Spare crew quarters provide basic comforts and private cabins. Captains have little leeway in changing schedules, destinations, or time in port. Passengers do not have the run of the ship: they must confine themselves to the wardroom, galley, and personnel decks. Corporate freighters are among the least risky forms of chartered vessels, their primary obstacles being customs formalities and greedy pirates.

Private Charter Vessel: Dedicated charter services are rare but exist. Such captains often fly for pleasure and excitement, having the means to own their ship (or fly one for a wealthy patron) and not worrying about making lucrative cargo runs to pay for expenses. Charter vessels vary in size, cargo space, speed, and armament, offering passengers a variety of ships based on their needs. Unless they have other planned trips, pilots have the luxury of flying the most direct routes to nearly any system on their own schedule. Although perhaps the safest form of charter flight, it's among the most expensive.

Warships

Civilian travelers cannot gain passage aboard warships of official governments, unless, of course, they maintain some special bureaucratic or diplomatic status, or they're prisoners in the brig.

Members of the military have the option of transferring to different posts aboard warships heading to the desired

location. Such travel comes at the military's pleasure: if no force deploys to the destination planet, one cannot reach it aboard a warship. Travelers using this option often find themselves under military authority, and they must observe common martial courtesies, obey authority, and follow orders if the vessel requires their skills. Should emergencies require the craft to divert to a hot spot, the characters have little choice but to tag along (and possibly become embroiled in the action). For those participating in purely military campaigns, most action occurs on capital ships patrolling, deploying to combat zones, or hunting enemies, though "shore leave" on different planets provides a dirtside respite from shipboard action.

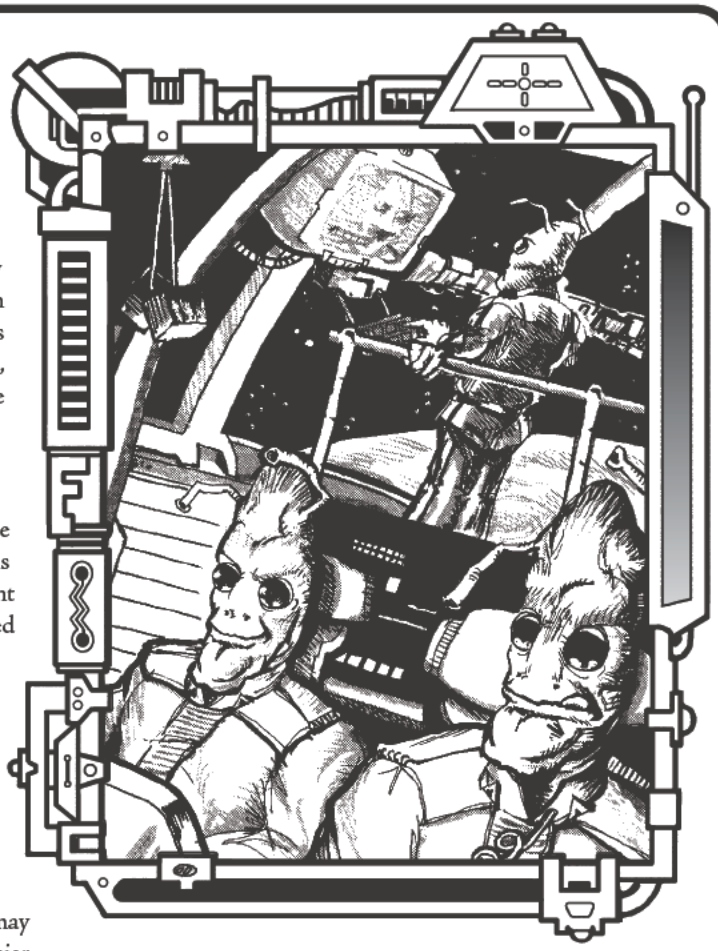

Restrictive Travel

Some settings severely restrict interstellar mobility by the very nature of interstellar travel technology or limitations imposed by the dominant civilization. Few gamemasters want to constrain characters and settings with highly controlled transport systems, but they may wish to create explanations for campaigns focusing less on star-faring and more on planetary adventures. Several scenarios exist under which limited galactic travel might operate.

Jumpgates and Wormholes: Interstellar technology could evolve around the concept of limited jump points between systems, such as massive gate constructs or existing stable wormholes. The governments maintaining these routes exercise a great deal of control determining who may jump and when. The bottlenecks these points make allow easier customs inspection, tariff collection, and security scans. They also minimize unauthorized travel, pirates, and smugglers. Spacecraft rely on these jump points to open dimensional gates to other destinations — they do not possess interstellar drives to jump on their own (either by lack of proper technology or the ruling civilization's desire to limit civilian mobility). Characters can still possess their own ships, but they are at the mercy of those controlling jumpgates and wormholes for passage to other worlds. A typical journey requires a bureaucratic application for the proper travel permits, payment of relevant fees and cargo taxes, and cooperation with authorities on approach to the jump point at the scheduled departure time.

Secret of Astrogation: Powerful institutions may guard the secret of astro-navigation to destinations, doling it out only to those with proper authorization and payment. Such limitations are built into starship technology. The government may hold the only truly accurate star charts and therefore the coordinates for the safest routes between worlds; as part of their official flight authorization, pilots receive a one-use coded data cylinder that burns out after imparting coordinates to a ship's flight computer. A enigmatic cabal of sages might control a race of telepathic aliens with intuitive astro-navigation powers or the ability to open and close hyperspatial rifts; after obtaining an alien through official channels, captains seal them in secluded pod where the creature melds with the craft's navigational system for the interstellar flight or communes with reality to open a rift in space-time (though the alien must be returned intact on arriving at their destination). Such systems that guard the keys of galactic navigation provide opportunities to steal the secret, circumvent official channels, and otherwise find ways to expand the heroes' freedom of movement.

Government Transport: Society and industry flourish with a legal prohibition on small, personally owned craft and a dependence on officially sanctioned government starships. Anyone wishing to travel to a distant world must book passage on a passenger liner, subjecting themselves to inspections, fares, tariffs, and the limitations of the ship's schedule and itinerary. This severely restricts character mobility, and it best serves campaigns centered on planetary locales.

Space-Faring Authorities

Various institutions regulate space travel. The extent of their power depends on the setting's tone and theme. Travelers on an exploration mission probably don't run into customs inspectors or local system militias — they have their own problems investigating the undiscovered reaches of space. Spacers in a smuggling campaign obviously run into customs officials and trade organizations, while those in a military setting regularly deal with war fleets and pirates.

The descriptions herein briefly outline various authorities heroes might encounter, as well as the extent of their control. Gamemasters seeking further ideas on integrating such entities into their campaigns should consult the section on "Politics and Contraband" starting on page 74 of chapter 5.

Military Fleets

Most wide-reaching galactic powers enforce their edicts with vast fleets of military vessels: cruisers and battleships, carriers with launch bays filled with fighters, scout craft, and even spy ships with advanced sensor arrays. The military exists to protect a government's territory and assets from all threats. Task forces sortie to confront known enemies, intercepting them before they strike, destroying their bases, and responding to immediate attacks. Small fleets often stand permanent vigil near high profile targets, ready to repel any assault. Cruisers patrol sector travel routes to ensure civilian craft have safe passage between systems. Escorts protect diplomatic vessels engaged in delicate or dangerous negotiations.

Military fleet facilities and resources include:

> planetside bases for fighter squadrons, ground forces, supply depots, and repair units

> orbital docking and repair facilities for capital ships and personnel transfer

> deep space deployment and supply stations

> fortified ground defenses near hostile or frontier territory

> secret deep space listening posts near enemy borders

Some campaigns focus on military activity in space. Characters serving aboard warships or in fighter squadrons act as soldiers of one government against its adversaries: alien invaders, hostile empires, pirates, and internal rebels. Since they're active military personnel, such heroes frequently spend their time on allied fleets guarding against and often directly confronting enemy warships.

Heroes who aren't in the military may still encounter fleets in their travels near bases, capitals, combat zones, and planets of tactical value. Law-abiding characters have nothing to fear from the massive fleet deployments. Although space navies don't usually engage in simple law-enforcement activities (especially on the planetary level), they do serve governments in hunting down those who have committed capital crimes and severe offenses (see "Star-Faring Regulations" in this chapter for details about violations that fall into these categories).

Trade Agencies

Mercantile organizations control commerce between planets. Corporate alliances, merchant guilds, and customs administrations on the galactic and local level all seek to regulate and assess fees on interstellar trade. In conjunction with planetary and sector governments, they help determine which commodities merchants can freely trade, which ones require monitoring through fees and permits, and which materials are contraband. Trade agencies enforce these agendas with their own paramilitary fleets and ground units, though these rarely approach the level of full military forces. Customs cutters patrol systems with heavy mercantile traffic. Elite sentries protect corporate factories, warehouses, and offices. Guilds sponsor punitive measures against members and outsiders who breach their bylaws.

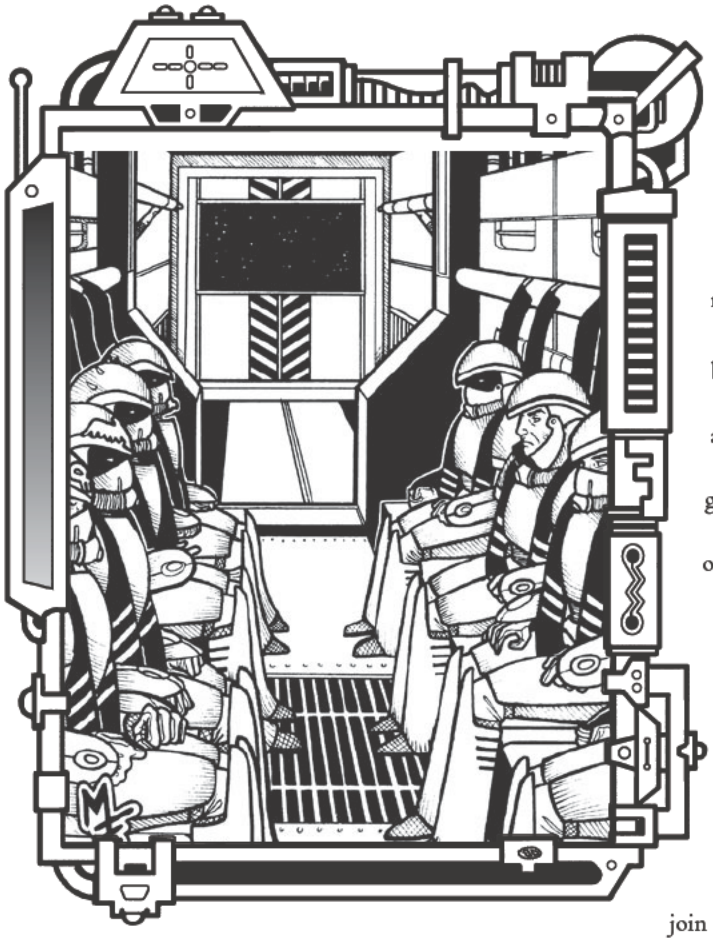

Trade bureaus most often prosecute criminals who abuse the space travel infrastructure for personal profit at the expense of others. They issue permits (and collect fees) for purchase, transport, and sale of restricted goods. They collect taxes based on the value of goods going to market. They pursue anyone dealing in illegal or stolen materials, even if corrupt trade agencies handle such merchandise covertly.

Merchant associations have a variety of available resources:

> customs patrol ships protect in-system traffic and board suspect vessels

> agency inspectors examine cargo, check credentials, and collect taxes on imported or exported goods

> guarded warehouses hold quarantined or impounded goods

> customs security troops conduct raids against criminal organizations, smugglers, and gunrunners

> vast office complexes control agency activities, record transactions, and influence markets

Civilian characters encounter agents of mercantile regulatory institutions more often than military forces. Freighter captains often dread customs inspections, either docked with a patrol craft or boarded upon landing. Fees, tariffs, and penalties related to innumerable local and interstellar trade regulations eat away at profits. Even travelers aboard starliners must submit to searches for contraband. Many guilds require starport businesses to join their associations to ensure profitability and security.

Accessing: D6 Space Ships File 1
Notes: Guild fee is past due.

System Militias

Local militias maintain peace on the system level. Such forces vary greatly depending on the planet's wealth, interstellar status, distance from major trade routes, and overall importance in regional affairs. Sponsored by the local government, aristocracy, or dominant mercantile power, militias vary from one patrol cutter and a handful of starport security officers to small in-system fleets and entire legions of soldiers. These units serve as the ruling enforcement agency at the planetary level, subject of course to military forces and trade associations with interests in the region. Native laws and prohibitions can sometimes turn a benevolent and helpful militia into a bullying force aggressively enforcing a local agenda (see the section on odd local ordinances under "Star-Faring Regulations").

Although militia resources vary widely, some common capabilities include:

> checkpoints to control and inspect incoming and outgoing travelers and their baggage

> security stations to respond to law enforcement incidents

> ground and air vehicles to implement local laws and ensure general safety

> in-system patrol craft to protect against pirates and intercept criminals

Heroes visiting any starport inevitably run into local militia. They patrol the streets, accompany customs inspectors, respond to criminal incidents, provide protection for valuables, and generally enforce an irritating host of petty local laws. Anyone getting into trouble finds a handful of militia guards on their trail.

Starport Control

The forces that manage and protect starport facilities fall under the jurisdiction of local militias, though they often operate independently to ensure their own interests. Smaller operations simply assign a militia unit to undertake guard duty, tariff collection, inspections, traffic control, and law enforcement in port areas. They are considered starport administrative personnel simply by the fact that their "beat" consists of docking areas and warehouses. Immense ports have a huge starport control bureaucracy that may even rival the size of the local militia infrastructure.

Starport control resources and facilities include:

> a traffic control tower to monitor starship movements on approach and departure

> checkpoints to control and inspect freighter cargoes and crews

> ground and air vehicles to secure docking areas and ensure general safety

> liaison offices to issue permits, identification, and other datawork for interstellar travelers and crews

Anyone frequenting starports — including independent captains or travelers — inevitably encounters starport control personnel at some level. Pilots talk with traffic coordinators for approach and departure clearances. Checkpoints and inspections are routine, but may increase during heightened security. Those causing trouble within starport precincts usually find themselves facing starport security, with planetary militia forces called in for serious problems.

Starport Fees _

Credits listed are examples; gamemasters should adjust them to better reflect availability in their own settings.

Spaceport	Landing Fees Difficulty (Credits)	Repair Labor Costs Difficulty (Credits)
Backwater	Difficult (4,000)	Very Difficult (8,000)
Dependent colony	Moderate (400)	Difficult (4,000)
Minor	Moderate (400)	Moderate (400)
Major	Easy (200)	Moderate (400)
Hub	Easy (200)	Easy (200)
Principal government	Moderate (400)	Easy (200)

Docking and Repair Fees

Use the "Starport Fees" chart as guide to determining the difficulties for paying docking charges and repair costs at different classes of facilities. Representatives of local militia force or starport administration collect landing fees in person upon arrival, require payment at automated kiosks before landing bay doors open for access to the starport, or deny departure clearance until paid at a central office. Assume that docking payments include the cost of basic maintenance for a craft, such as life-support refills and fuel/recharging. Modify repair cost difficulties by +5 (+50%) for heavy damage and +10 (+100%) for severe damage.

Honor Among Thieves

Some more disciplined extra-legal groups provide security and stability for fringe regions, including pirate bands, criminal organizations, spacer gangs, and those rising up against established and often corrupt galactic authorities. These factions provide some semblance of law enforcement where no established government rules.

The resources of impromptu enforcement units differ based on the nature of the parent organization. Pirate bands implement a code of conduct to maintain some semblance of order, with violations prosecuted by an impartial sergeant at arms appointed by the captain. Local gangs often defer to their leaders to resolve internal disputes. Organized criminal syndicates retain various units to ensure peaceful internal operation, root out stooges, undertake combat operations, hunt down traitors, and carry out action against those outside the association. Rebel factions and paramilitary organizations keep strict discipline through a corps of security personnel.

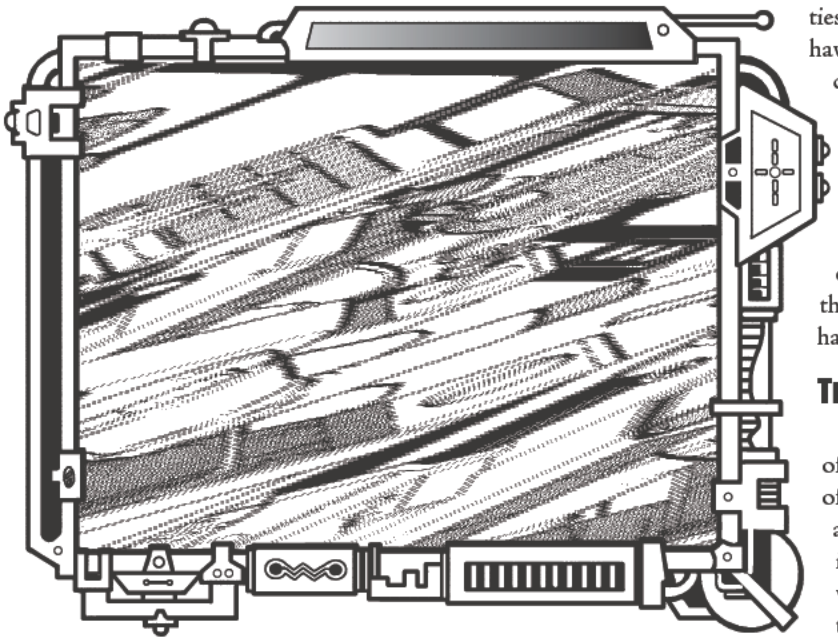

Although most outlaw groups encourage some degree of lawful order to operate effectively, some simply bask in savage anarchy where only the strongest and most influential survive to make and enforce the "rules." Lack of any code of behavior only encourages discord within the ranks, constant in-fighting, disregard for orders, and an overall weakness when faced with outside threats.

Star-Faring Regulations

Most interstellar and system governments expect spacers to observe numerous laws and regulations implemented to maintain peace, prosperity, and safety. Many seem like commonsense courtesy to law-abiding citizens. Various entities enforce these ordinances, from starport security and traffic control to local militias, customs patrols, and in dire cases, military vessels. Those who obey and respect the authorities, operate within the law, and fulfill their professional obligations have nothing to fear.

Most space-faring personnel must possess some accredited documentation proving they've received training and certification in their chosen duties. Pilots need licenses, engineers need technical certificates, and gunners need proficiency ratings. Vessels also require their share of datawork: registration with a government regulatory agency, permits to carry various types of cargo, and authorization to mount weapons (even if only intended for self-defense). Assume any character who's legitimately acquired a ship has the required datawork to allow legal operation. Gamemasters can revoke such documentation to penalize heroes, particularly if they commit crimes using their craft.

Although few galactic governments possess universal criminal codes, most categorize offenses into general classes of illegal activities. Tolerated misdeeds inhabit one end of the spectrum, while crimes punishable by execution stand ominously at the opposite end.

Tolerated Misdeeds

Few governments consider this level of wrongdoing an actual crime. Offenders really shouldn't engage in such activities if they know what's good for them, but they haven't really harmed anyone else or caused any disruptive amount of trouble. Those caught committing tolerated misdeeds often receive an official warning or an insignificant fine (payable on an Easy *Funds* roll, or 3D+2 times 10 credits). Anyone with a warning on record unfortunate enough to get caught engaged in another similar offense (usually in the same system) receives treatment as if they had committed a trivial violation.

Trivial Violations

Authorities deem this degree of crime worthy of punishment, but more to inform violators of the importance of the law and teach them a lesson to dissuade violators from repeating their behavior. The activities aren't quite worth overlooking, but they aren't worth the trouble of imprisoning anyone. Law enforcement officials simply fine offenders for their misdemeanors, payable with an Easy to Moderate *Funds* roll (or 1D times 100 credits; adjust depending on the offense's severity). This slap on the wrist also earns money for the government's coffers, which some crooked bureaucrats abuse for their advantage.

Minor Infractions

Criminal activities of this magnitude often violate laws enforcing control of trade or safe spacecraft operation. Offenders cause financial harm or put others at risk without inflicting actual physical injury. They disregard revenue-collecting agencies, flaunt customs regulations, and ignore flight procedures and requirements meant to insure everyone's safety. Penalties may include a fine requiring a Difficult *Funds* roll (or 1D+1 times 500 credits) to pay, or up to 5D days' incarceration.

Major Infractions

Violations at this level constitute obvious crimes in blatant defiance of the government's authority. Those convicted of major infractions must pay a fine requiring a Difficult *Funds* roll (or 1D+1 times 500 credits) and serve 4D months' imprisonment. Enforcement officials also impound any craft involved in the crime and revoke flight certifications and starship registration.

Severe Offenses

Authorities consider anyone committing even one offense of this magnitude a true career criminal. Offenders contribute directly to the degeneration of society, increased violence, and underworld activities. Violators receive a fine payable with a Very Difficult *Funds* roll (or 1D+4 times 1,000 credits) and spend 5D years in prison. Authorities also confiscate any craft involved and rescind flight certifications and starship registration.

Capital Crimes

The worst offenses challenge the overarching authority of governments, the military, their personnel, facilities, and vessels,

other than as an act of war. Those convicted of such heinous crimes in restrictive societies receive the death penalty, often in the form of highly publicized public executions to satisfy the mob's need to see justice served. More tolerant societies sentence such criminals to lifetime imprisonment or permanent exile where the prospect of escape and return remain nonexistent.

Enforcement Modifiers

Not all infractions carry the same punishments in every system. The laxity or strictness of a governing body might increase or decrease the severity of a crime by one level. For instance, a fanatically fundamental dictator might impose capital punishments for severe offenses, while an open-minded colony council would tolerate trivial misdeeds. Consider any crime modified beyond a capital offense as unimaginably atrocious, prosecuted with extreme vengeance. Use the "Sample Enforcement Modifiers" chart as a guide when varying the punishments for crimes in different parts of the galaxy.

No misdeed is ever considered less than "tolerated" or more than "capital," regardless of the modifier.

Odd Local Ordinances

Gamemasters might liven up their universe with planets that severely enforce peculiar laws reflecting local custom or prejudice. Sometimes characters remain unaware of these strange regulations until they break them, leading to interesting encounters with enforcement officials and offended natives. Such unusual edicts could also provide local color and ideas for entire scenarios. Planets that depend on interstellar trade and travel might restrict transient populations of off-worlders to separate "foreign quarters" where such regulations do not apply, but expect those wandering outside these contained areas to abide by regional laws and traditions.

Most cultures consider violation of these local ordinances minor infractions, but particularly intolerant system governments might punish offenders according to guidelines for major or severe crimes. Gamemasters should determine the strictness with which authorities enforce a strange local law and remain consistent in its prosecution should characters visit that system later.

The next page has some suggestions for odd local ordinances.

Sample Infractions and Enforcement Modifiers _

Locate the misdeed (or one similar to it) on this table to determine its starting regulation level. Then adjust the level by the condition of the system using the "Sample Enforcement Modifiers" chart to determine how that system treats the misdeed in question.

Infraction Level _

Tolerated Misdeeds

> failing to update in a timely fashion any changes to starship registration

> minor versions of trivial violations (such as having recently expired emergency supplies)

Trivial Violations

> using a restricted communications frequency or mode

> operating a vessel without adequate emergency equipment and life-support stores

> failing to file flight plans or disobeying traffic authority instructions

> violating local import, export, and other customs laws

Minor Infractions

> operating a vessel without a valid starship registration and pilot accreditation

> purchasing, possessing, transporting, or selling any commodity in quantity without proper taxation payments, permits, and proof of sale

> operating a vessel without properly displayed or transmitted identification

> failing to respond to communications from authorities

Major Infractions

> mounting shipboard weapons without a permit

> bribing a government official

> purchasing, possessing, transporting, or selling restricted materials without a permit; popular restricted substances include narcotics, medicines, and toxic materials

> disobeying orders from military authorities regarding flight plans

Severe Offenses

> committing violence against civilian personnel

> transporting military weapons and equipment without a permit

> purchasing, possessing, transporting, or selling illegal materials

> purchasing, possessing, transporting, or selling stolen items

> bribing military personnel

Capital Crimes

> attacking another ship

> engaging in acts of piracy, including support activities

> conspiring to overthrow a government

> committing violence against government or military personnel

> purchasing, possessing, transporting, or selling classified information or items

Sample Enforcement Modifiers _

Condition	Misdeed Treated as
Criminal authority	1 level less
Backwater system	1 level less
Informal government	1 level less
Military installation	1 level higher
Principal governmental system	1 level higher
Intolerant government	1 level higher

Alien Prejudice: The local government enforces laws more strictly against aliens. Tariffs and fees double, infraction levels increase, and aliens do not enjoy the same freedoms as the dominant population. Some merchants even refuse to deal with aliens. Bear in mind that some cultures may view Humans as undesirable aliens.

Food Prohibition: Authorities consider importing, preparing, and eating certain kinds of foodstuffs illegal. Vegetarian societies proscribe eating meat. Carnivorous cultures ban vegetables and fruit. Alien species that eat their own kind find other food offensive. Religions or philosophies consider particular foods "unclean." Importing prohibited food only encourages locals to violate the law.

Technology Ban: Some planets forbid general kinds of technology or specific items that the government believes corrupts the populace or places it in danger. A planet that recently fought a war against robot armies might prohibit androids, automated machines, or even computers. Fundamentalist authorities could outlaw entertainment technology it feels corrupts its followers. Environmentally conscious governments advocate biases against pollution-generating engines or machinery intended to strip natural resources.

Unbelievers Forbidden: Authorities do not tolerate those who don't subscribe to a particular (and often radical) set of beliefs. Such laws do not necessarily originate from religious institutions, but may arise from narrow political views ("Our planet should dominate the sector."), philosophical morals ("The way to enlightenment is through generous giving to society."), and economic theories ("Off-world competition hurts our financial system."). Such feelings reach beyond their limited fields and permeate every aspect of society, excluding if not actively persecuting those who don't believe.

Weapons Ban: To maintain peace, a system prohibits weapons to some degree. Some planets forbid any ship mounting weapons from landing, while others tolerate armed vessels but ban crewmembers from carrying any weapons, even those meant for self-defense. Sometimes a middle-ground exists, with differentiations made between energy and hand-to-hand weapons, concealed and openly worn, and those for personal defense and those mounted on starships.

Space Flight Times _

In System _

Destination from Orbit	Flight Time
Planetary surface	1–5 minutes (1D minutes)
Interstellar transition point (or more, depending on setting)	5–10 minutes (1D+4 minutes)
Planetary moon	10–60 minutes (1D x 10 minutes)
Nearby planet	1–6 hours (1D hours)
System's outer limits	10–48 hours (1D hours)

Interstellar _

Destination	Flight Time
System in same sector	1D days
System in same region	2D days
System in neighboring region	2D weeks
System in distant region	2D months

> Halve travel time for well-known routes.

> Increase time by 1D (days, weeks, or months) for hazardous routes.

Starship Operations

Drive Systems

Space-faring vessels rely on at least an in-system drive for short-distance propulsion and for power to operate the ship's functions. In some settings, they also have an interstellar drive that enables the craft to "jump" to points across the galaxy.

Power Plant

The power plant provides energy to the drives as well as onboard components like computers, weapons, life-support equipment, and shields. In game terms, the plant provides a set number of energy units used to power other systems (each with their own energy unit cost). Should a power plant sustain damage, it may reduce the energy unit output available for operations (though battery systems and burst capacitors allow limited function for most systems).

In-System Drives

Most vessels use conventional drives to fly between the various features of a star system: worlds, moons, orbital facilities, jump points, spacedocks, and asteroid fields. The drive not only consists of the main engines but other hardware (jets, retros, thrusters, or anti-grav pads) that enables greater maneuverability in both space and atmospheric flight. Such propulsion systems also allow smaller craft to enter planetary atmospheres and land on the surface, though some capital ships may also have strong enough drives and reentry shields to enable atmospheric flight.

Few vessels use conventional drives to travel between even neighboring systems. Such ships take vast amounts of time, sometimes upwards of a century to reach their destination. Characters sometimes see such drive configurations aboard automated freighters ferrying bulk cargo with no arrival deadline. Lower-technology civilizations often equip colony ships with such drives as their only method of reaching nearby systems; settlers survive the journey in suspended animation or are part of a generation ship (and their descendents arrive at the planet).

Interstellar Drives

The machinery enabling interstellar flight sits near the conventional drives. Each space setting might rely on a different faster-than-light travel technology, or several might exist within the same universe.

Interstellar drives propel the ship from one system to another at speeds beyond that of light. Some open a controlled wormhole

Sample Gazetteer _

Gamemasters can use this gazetteer as a guideline for charting their own jump times between systems. The column includes both place names and parenthetical descriptions, while the row simply list names. Note that not every route has a time listed — this represents an evolving campaign setting where the characters have not yet traveled along (and therefore the gamemaster has not yet determined durations for) every route.

	Ara'vena	Camleth	Garaloth	Kul-Sool	Tonn
Ara'vena (pleasure world)	—	3 days	2 weeks		3 months
Camleth (sector capital)	3 days	—		4 weeks	
Garaloth (feudal technocracy)	2 weeks		—		
Kul-Sool (alien Sara-vak outpost)		4 weeks		—	6 days
Tonn (primitive backwater)	3 months			6 days	—

in the space-time fabric, forming a tunnel between the point of origin and the destination. Others open a rift into a parallel dimension (sometimes called hyper- or jumpspace) where different laws of physics allow phenomenal speeds. Drives might cause space to fold, temporarily warping the universe to link the jump point with a distant location.

The exact technology isn't important in the game or the setting (it's more for flavor) — most people take interstellar travel for granted, though few know precisely how or why it works.

Note that, in most settings, the interstellar drive may not be activated within a planet's atmosphere. Some settings may go so far as to dictate where in a solar system an interstellar drive may be activated without dire consequences.

Drive Ratings

Every interstellar drive has a rating that determines how fast the vessel travels using that drive. Most civilian ships have ratings between 0.1 and 0.5, while military drives rate 1 or higher. To figure the duration of a jump, determine the base time using the "Interstellar Flight Times" chart, then divide that number by the drive rating. For instance, if the base time is 5 days, a civilian light freighter with a 0.5 drive would take 10 days to reach the destination, while a battle cruiser with a drive rating of 2 would take 2.5 days.

Variable Drive Rating

Some settings may prefer to allow their ships to travel at speeds less than the ship's full driving rating. This does not affect the difficulty in anyway, though the amount of energy consumed by the ship is reduced by a proportionate amount. (Thus, if the ship has a drive rating of 0.5 but only moves at 0.25, the energy consumption for the interstellar drive is reduced by half.)

Gamemasters also can use this method for deciding the maximum interstellar movement rate when the drives are crippled or don't have enough power going to them.

Gazetteer

The "Interstellar Flight Times" chart serves as a general guide to setting route durations between particular destinations. Gamemasters should note the results each time they roll on this chart so they can remain consistent for future trips between systems.

A gazetteer is a matrix that cross-indexes two travel points and the route time. Every time the heroes visit a new system, gamemasters should add its name to both axes of the gazetteer, then note the travel time from the point of origin in the appro-

Sample Planet Log _

This sample journal entry includes basic gamemaster notes about a planet the heroes visit, including travel times to other established campaign destinations.

Ara'vena: Pleasure World _

Run by the Tuuva, pot-bellied humanoids with wide smiles and jovial demeanors, the resorts of Ara'vena provide numerous diversions for citizens of every government and species. Different ports cater to various clienteles (such as rough smugglers, refined aesthetes, and pompous bureaucrats) with diverse amenities (including casinos, pleasure arcades, spas, concert halls, and meditation gardens).

Costs

> **Port Fees:** Moderate (3D x 100 credits)
> **Accommodations:** Moderate (3D x 100 credits)
> **Good Meal:** Easy (1D+2 x 10 credits)
> **Night's Entertainment:** Easy (1D+2 x 10 credits) to Moderate (3D x 100 credits)

Travel Times

> **Camleth:** 3 days
> **Garaloth:** 2 weeks
> **Tonn:** 3 months

priate space. Should the characters travel to a destination from a different location later, gamemasters can fill in the appropriate blank with the flight time they roll.

As an alternative, gamemasters can maintain a planet log, jotting down basic information about a destination, including typical travel times from other locations in the universe.

Jump Activities

In many campaigns, engaging the interstellar drive propels characters out of danger and into the relative safety of jump space. Since such journeys can last from a few days to many months, the heroes potentially have a lot of time on their hands. Gamemasters can simply cut to the next significant action, usually arriving at their destination or being yanked back into normal space by some anomaly, pirates, or obstruction.

In some cases, however, characters might want some shipboard downtime away from constant action to pursue personal or scenario-related goals. Gamemasters should decide if any activities advance the story, develop characters, or gain future advantages enough for the participating heroes to receive Character Point bonuses.

Character Interaction: The heroes might use this time to interact with each other, discussing recent developments, planning their next move, or talking with gamemaster's characters along for the ride.

Research: Using computer databanks, laboratories, or instruments aboard the ship, heroes might conduct research pertinent to the adventure at hand or their professional interests. Long transit durations provide plenty of time for such extended actions.

Maintenance and Repairs: Those with engineering talents might spend time maintaining or repairing the vessel's accessible systems, especially if damaged in recent confrontations. Most ships include engineering spaces to reach various components from within, plus stores of spare parts that tend to wear down. Depending on the length of a journey and the severity of damage, heroes might have time to make several *flight systems repair* rolls.

Personal Improvement: Heroes might seek to improve themselves by pursuing knowledge, engaging in hobbies, or trying to improve their skills. The star-struck stowaway might write love poetry to his sweetheart back home, the tech wiz might tinker with spare parts or modify her robot, and the mystic pilgrim might find peace in meditation. Gamemasters also could allow heroes to advance in game terms by permitting them to spend Character Points under the pretense that their self-improvement pursuits have tangible results.

Detrimental Drive Technology

What if a society's interstellar drive technology has subtle side effects that slowly emerge during the course of a campaign? Such defects in accepted scientific principles might not immediately matter to the heroes, but they could eventually become embroiled in a conspiracy to hide the truth. Devious gamemasters can use one of these sinister elements to add a dark undercurrent to their campaign.

Solar Fuel: Although a ship's conventional drive provides the initial energy to engage interstellar flight, a dimensional tether actually drains the power for sustained travel from distant and (hopefully) uninhabited stars. A space-faring society eventually begins collapsing suns and igniting supernovas. Unless someone harnesses an alternate energy source for such drives, stars within settled space may start to explode.

Dark Dimensions: Evil forces reside in the alternate dimension in which ships travel faster than light. Each time a vessel jumps, elements of this foul presence seep into the normal universe. They seek out powerful individuals to corrupt into instruments by which they can free masses of their foul kind from their interplanar imprisonment.

Alien Sacrifices: Every few jumps, starship crews must replace large buffer capacitors in the interstellar drive assembly, a minor expense and simple maintenance operation. Only the highest government officials know that these capacitors contain imprisoned aliens enslaved on a remote, secret world. Each jump drains the creatures' vast inner power or mental energy to correctly open the portal into hyperspace or navigate the ship to its destination.

In such situations, governments try to conceal evidence of these dangers while searching for other, less harmful means of interstellar flight. Should anyone discover the truth about the dangers of interstellar flight, they become targets for authorities willing to go to any length to protect these technologies. The heroes could uncover such information and become hunted fugitives, or they might work for the authorities to "eliminate" inquisitive scientists, environmental activists, and political dissidents intent on exposing the secret. Characters might even become involved in developing and testing some new, safer interstellar drive.

Space Navigation

Ships with interstellar drives must navigate the vast distances and myriad hazards to their destinations. A complex navigational computer linked with the craft's interstellar drive enables the pilot or navigator to set, calculate, and initiate a safe course to distant star systems. Established routes require simple calculations, but courses to less-visited systems or entirely unexplored destinations call for intricate computations. Astrographical hazards like nebulae, black holes, asteroid fields, supernovas, and neutron stars can make even short jumps longer or more difficult to calculate.

Navigation Checklist

Captains or navigators traveling to other systems must undertake several steps to calculate their course:

1. Verify the trip destination and duration.
2. Calculate coordinates for the interstellar journey.
3. Figure out the *navigation* difficulty number.
4. Roll *navigation* and determine results.

1. Verify the trip destination and duration: Using guidelines from this chapter's "Interstellar Drives" section, determine the

destination and how long the jump should take. Gamemasters can refer to the "Interstellar Flight Times" chart or might consult their own gazetteer, planetary profiles, or other campaign notes for jump durations. Divide this base time by the ship's drive rating to figure the actual flight time for this particular craft.

Gamemasters may require an *astrography* roll to figure out the destination, its distance, the best route, and so on. The less well know the destination is to the navigator, the greater the difficulty.

2. Calculate coordinates for the interstellar journey: Computers run calculations at amazing speeds, but the information needed for accurate and safe interstellar flight requires careful entry and massive processor activity. Captains with regular schedules often begin calculations for their next destination as soon as they land, even if for a week-long layover. Others hastily program their nav-computers while fleeing from authorities or other adversaries ... and hope they don't botch the job. Use the "Calculation Time" chart to determine how long it takes to enter and process the course coordinates. The more well-traveled a route, the shorter the time. Cut the time in half if rushing, but don't forget to add +10 to the final *navigation* difficulty in the next step.

3. Figure out the *navigation* difficulty number: Calculating accurate coordinates requires a base Moderate *navigation* roll, adjusted by the conditions outlined on the "Navigation Roll Modifiers" chart. Captains piloting vessels with interstellar drives and no operational nav-computer have a +30 adjustment to their difficulty, assuming they possess antiquated instruments that manually plot courses they program into the drives themselves.

4. Roll *navigation* and determine results: Upon engaging the interstellar drives, the navigator or captain makes a *navigation* roll to beat the set difficulty. Find the difference between the difficulty number and this skill roll total (which may be positive or negative) and reference the "Space Navigation Results" chart to see how well the journey went.

Calculation Time

Condition	Time
Precalculated coordinates	1 minute
Well-traveled route	1 minute
Uncertain route to known planet	30 minutes
First time traveling to system	2D hours
Lost in space (from miscalculation or obstacle)	1 day

Navigation Roll Modifiers

Situation	Modifier
No navigation computer	+30
Hasty calculations	+10
Each extra hour added to trip	-1
Each hour saved on trip	+1
Obstacles along course	+1 to +30 or more

Space Navigation Results

These are only suggestions; gamemasters may modify this chart as appropriate for their own campaigns and individual circumstances.

Result Points	Result
+5 or more	Saved an hour on the trip per 5 points over the difficulty (round down).
0 to +4	Trip occurred without mishap.
-1, -2	A radiation surge or other mishap affects the drive's performance and damages another system on the ship (gamemaster selects). The characters must use the appropriate repair skill with a Moderate difficulty to fix it. The trip is extended by 2D hours.
-3, -4	The calculations were good enough to get the characters to a destination, just the wrong one (perhaps from a computer malfunction or an unplotted obstacle).
-5, -6	The interstellar drive cut-out to avoid a collision with an unplotted obstacle. A Moderate *flight systems repair* roll is necessary to get the engines back on line. The characters must also replot a course from their new position over the course of a day.
-7 or more	The computer refuses the calculation and requires them to be refigured.

Navigation Mishaps

Gamemasters shouldn't limit themselves to the outcomes on the "Space Navigation Results" chart, especially if more specific mishaps would further the story.

For instance, a damaged starship system might prompt the characters to visit a strange port for repairs, or require them to do without the equipment for the rest of the scenario. The obstacle that wanders into their path, forcing the interstellar drive to cut out, might divert them to a different adventure: exploring a rogue planet, scavenging a massive derelict alien vessel, or avoiding a vast enemy fleet.

In cases where the *navigation* roll fails miserably, gamemasters can improvise dire results. Rather than the computer simply disallowing the calculation and aborting any jump before it begins, it might send the heroes far into uncharted territory, on a near-miss course with a mysterious nebula, or directly into the hands of their adversaries. At the very least, it could seriously damage their ship, stranding the characters far from home in a very strange part of space.

Intercepting Interstellar Craft

Various agencies often seek to intercept vessels traveling between systems on interstellar drives. Pirates set traps for unsuspecting freighters they can disable, board, and pillage.

Military fleets seek to intercept and engage enemy ships heading for fresh targets. Corporations attempt to eliminate rivals in the depths of space where nobody can find the evidence. Sector authorities try to ambush outlaws. Such people often employ one of three effective strategies for intercepting vessels with interstellar drives.

Forced Drive Disengage: Most interstellar drive systems key into the ship's sensors to detect anomalies in the space just ahead and then automatically disengage the drive in cases of imminent collision. This dumps the craft out of any parallel travel dimension or warp speeds and into normal space in the immediate vicinity of the obstacle. Usually this results from faulty navigation coordinates but sometimes from deliberate interference. Enemies intent on intercepting a target that's engaged its interstellar drive simply place some obstacle in the victim's way. This often occurs along major travel routes, or when those waiting in ambush know the target's intended course. Depending on their resources, raiders can tow a massive asteroid (or sometimes an entire field, given time), maneuver a small fleet, or jettison enough large debris into the victim's path. Governments sometimes employ special craft with huge gravity field generators to simulate an obstacle. The forced drive disengage often damages the target, though raiders always stand prepared to close in, disable, and board craft.

Sabotage: When adversaries have advanced knowledge of a target's identity and course, they sometimes send a saboteur to infiltrate the craft while docked and rig it to disable the drives at a location advantageous to the ambushers. Since they're under surveillance before the event, the victims have some chance to notice someone's monitoring them, but unless they conduct a detailed inspection of their ship, they won't realize anything's amiss until the drives cut out. Refer to the sabotage rules in the "Starship Damage" section for more details.

In-System Intercept: For those without the knowledge or means to sabotage the target or force the drive to disengage, the easiest way to catch a ship with interstellar drives remains intercepting it in a system. Planetary officials rely on this method when checking vessel identification near starports and other destinations. But catching craft unaware often involves intercepting them just before it engages its drive or just after it disengages it on entering a system. Unfortunately little cover exists for raiders to lurk undetected, since most points from which craft engage their interstellar drive must avoid interference from gravity fields generated by massive astrographical features like planets and moons. Fast-attack vessels rush the target craft first to distract or disable the victim while larger, slower ships move into range to trap it and prepare for boarding. This situation, however, provides the most escape possibilities for the victim.

In-System Operations

Most space-faring civilizations have common conventions regarding flight within star systems, from the trade-route hub and sector capital to the most remote backwater and unexplored worlds. Spacers regard these protocols as courtesies to ignore when it best suits their purpose, though in some more regulated regions polite procedure forms the basis for enforced travel laws.

Sensors

Upon entering a system or departing from a planet or orbital station, ships scan nearby space for other ships, unexpected hazards, or threatening activity. The scanner operator rolls her *sensors* skill to notice anything using the craft's instruments, adding any dice if the ship has upgraded sensors. (Characters should make a *Perception* or *search* roll to make observations while peering through viewports.)

Operators generally run three different scans depending on the kind of information they seek about the space around their ship:

Basic Scan (Easy difficulty): A vessel's sensors always run a passive scan that collects signals from nearby objects: ship identifier broadcasts, active comm frequencies, energy from operational spaceships, stars, planets, moons, and other bodies. Characters use this level to detect the most obvious bodies around their craft.

Full Scan (Moderate difficulty): An active scan emits waves, beams, or other energy outward from a craft and picks up signals reflected from other objects in space. This provides more detailed information about targets, but it also alerts others to the scanning ship's presence (and in many cases the fact that it's performing a scan).

Dedicated Scan (Difficult difficulty): Operators can focus an active scan on a particular area or object of interest to gain even more details about its nature. Tightening the sensor's emissions and concentrating on return pings from a narrow target has the side effect of washing out readings normally gathered through basic scans.

Although the kind of scan determines the base difficulty for successfully noticing objects using the *scanner* skill, any target's activity (even if as yet undetected by the sensor crew) also affects the ability to effectively detect it. Use the "Sensor Target Activity Modifiers" chart for guidelines on adjusting difficulties for specific *sensors* rolls.

Use the "Result Points and Success" chart on page 62 of the rulebook to help determine how many details and the quality of the information gathered from the scan.

Sensor Target Activity Modifiers

Target Activity	*Sensor* Modifier
Actively scanning; engaged in combat	-10
Moving	-5
Significantly larger than scanning vessel (or subtract scale modifier)	-5
Ship identifier off	+3
Significantly smaller than scanning craft (or add scale modifier)	+5
Hiding in asteroid fields; behind moon; amid spaceborne objects	+5
Running silent	+10
Near astrographical interference	+1 to +10 or more

Ship Identifier

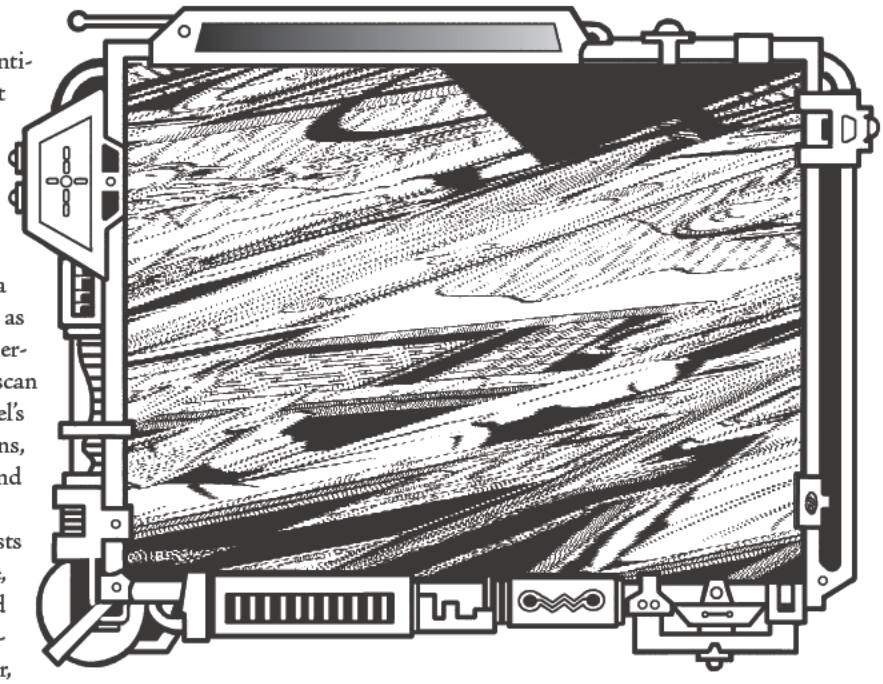

In many settings, vessels have ship identifiers (also known as transponders) that broadcast basic information about their configuration and registration to other craft in the system and starport traffic control facilities. This alerts others to the ship's presence for purposes of safe transit, landing, and departure. Should a craft crash land, a transponder functions as a basic rescue beacon even if other emergency signals exist. Authorities also scan transponders to identify outlaws or vessel's in violation of local and regional regulations, while military fleets use them to tell friend from foe.

Transponder pings send out short bursts of information: the ship's official name, registry number (including owner and captain's names, home port, and any government affiliation), and class (fighter, liner, freighter, capital ship, etc., and the degree of armament). This data helps authorities give priority in traffic patterns, assign routes around the system, and generally guide flight to avoid accidents.

In most civilized space, law enforcement agencies consider vessels running without broadcasting a regular transponder signal as criminal. They view turning off the transponder as a criminal act by spacers who wish to conceal their identity and avoid authorities. Unless characters can prove their transponder is damaged, their ship quickly acquires a notorious reputation.

Countermeasures

Some ships can engage various forms of countermeasures to avoid detection or obscure accurate sensor readings. Turning off the transponder is the easiest and least effective of countermeasures. Depending on a vessel's equipment, captains might use other strategies.

Astrographical Interference: Astrographical features that naturally interfere with sensor readings (nebulae, quasars, black holes, neutron stars, etc.) can jam scanners and mask a vessel drifting nearby. The effectiveness directly relates to how close to the interference the captain can pilot the craft — often a dangerous proposition.

Broadcast Jamming: Some engineers rig the ship's communications and sensor arrays to broadcast electronic garbage (a Very Difficult *flight systems repair* or *sensors* task, the skill depending on whether the rigging uses hardwiring — requiring *repair* — or software — requiring *sensors*). Other vessels' scanner readings get flooded with useless junk. Although sensors can locate the jamming ship, they have difficulty determining anything else about it.

Decoys: Some vessels carry decoys that, when deployed, scatter and transmit sensor data as if they were the target ship. Exorbitant cost sets these systems beyond the reach of normal space-faring civilians, leaving governments to equip couriers and spy ships with such gear. Others might simply jettison cargo, debris, gas, liquids, or other materials to create obstacles to scanning and pursuit. Both methods often confuse opposing sensor operators.

Running Silent: By shutting down all systems, including life support and the power plant, a ship becomes nearly invisible to all but the most focused electronic scans. Unfortunately few vessels can survive for more than five minutes without powered life support unless they tap into emergency stores of air. Powering down an entire ship may take several minutes (depending on its size and complexity), and re-engaging power might take just as long in an emergency.

Communications

Besides running sensor scans when arriving in a system, most spacers also contact the local traffic authority to announce their presence and intended course, and receive any special instructions, general messages to spacers, flight advisories, or notice of military activity. Officials often initiate contact with incoming or departing vessels as a standard procedure for monitoring activities in their territory. Only discourteous travelers or those with something to hide refrain from contact with system authorities and other ships.

Vessels communicate with each other and traffic control facilities using subspace transceivers that can broadcast messages using specific energy forms and frequencies within a system. Without sophisticated and expensive encrypting devices at both sending and receiving ends, these transmissions are made "in the clear," intelligible to most within the sector tuning into a given channel. Certain frequencies remain reserved for emergency communications, traffic control, military activity, advisories, and official starport and enforcement messages.

Most craft with more than one command station often link the crew with an internal intercom hardwired into the craft's circuitry. Each station has a speaker-microphone set-up with a "send"

button, though more sophisticated systems exist using headsets plugged into an interface. Eavesdropping on such internal communications requires either special "bug" devices to boost signals and retransmit messages or some direct link to the hull.

Only military ships and commercial communications arrays possess transceivers that can broadcast real-time messages between systems, and even these require powerful relays and boost stations.

Spaceship Movement

Pilots and helm commanders fly their ships through space (and various obstacles they encounter) using their *piloting* skill. For speed-related actions, they rely solely on this skill. When maneuvering, they add their vessel's Maneuverability code to their *piloting* skill. Any hazards of atmospheric or astrographic terrain may modify these rolls — consult the "Space Movement" chart in this book for space travel, or the "Movement Difficulty Modifiers" chart on page 64 of the *D6 Space* rulebook for atmospheric flight.

Vessels travel at various sublight rates associated with their Move scores, as determined by the pilot. Each rate affects the difficulty of *piloting* rolls and the in-system drive's power consumption.

Full Stop: The ship comes to a complete stop. This requires no *piloting* roll unless the ship is slowing from *cautious* speed to a *full stop* in a docking maneuver or a difficult landing. Ships in atmosphere should be near the ground or they begin a rapid dive. At this rate, the drive consumes no energy units.

Cautious: The vessel travels at half its Move. This is generally a free action requiring no roll, but hazardous conditions may increase it from its base difficulty of zero. Craft in atmosphere must be attempting to reach a higher or lower altitude at this rate, and they cannot maintain altitude at *cautious* speed. Drives consume one-quarter of their energy unit requirement.

Cruising: The ship travels at its Move. This requires an action, but characters should roll only if movement conditions would otherwise modify the difficultly from zero. *Cruising* vessels consume half of energy units of the drive's standard rate.

High: The craft travels at twice its Move. This requires a *piloting* roll with a base difficulty of 5, modified by existing conditions. Drives consume the standard energy unit requirement.

All-out: The ship travels at 4 times its Move, requiring a *piloting* roll with a base difficulty of 10, modified by existing conditions. Drives consume 2 times as many energy units.

Ships may travel anywhere between half their current speed and the full current speed at each level.

Pilots may accelerate or decelerate one level higher or lower than their current movement rate at the difficulty listed in the description. For example, a ship at cruising speed may increase to *high* speed or decrease to *cautious* speed; it cannot jump to *all-out* speed or *full stop* without greater difficulty.

To accelerate or decelerate faster, the pilot generates a *piloting* roll with a difficulty of the ship's scale. If the pilot succeeds, he can change his speed by one additional level (for two levels total). If his total is at least twice his ship's scale, he may change two levels (for a total of three). And if the total is three times the ship's scale (or more!), he may change three levels, for a grand total of four; this is enough to bring a ship from *full stop* to *all out* (or vice versa) in one round. Failing this roll means the pilot was able to make his single free change, but nothing more. A Critical Failure with a failure means the ship's speed did not change at all (due to an engine malfunction, computer error, or some other mishap).

Standard Maneuvers

Maneuvers in relation to static or nonintelligent objects such as docking facilities and asteroids require a *piloting* roll augmented by any dice for the vessel's Maneuverability. The kind of maneuver determines the difficulty, while various conditions may modify it. Refer to the "Space Stunts" chart for a summary of spaceship maneuvers and their associated difficulties and modifiers.

Maneuvers relative to enemy craft as targets or attackers often require opposed *piloting* rolls (with any Maneuverability and scale modifiers) from the captains. Defenders often employ their *piloting* skill as characters would *dodge* (use the active partial or full defense rules to determine defense totals required to hit ships evading adversaries). For craft with fixed weapons or

Space Movement

Base Difficulties

Speed	Base Difficulty	Energy Consumed
Full Stop	0	0
Cautious	0	25%
Cruising	0	50%
High	5	100%
All-out	10	200%

Note: Modifiers from the "Space Movement" chart and the "Space Stunts" chart affect these base piloting *difficulties.*

Difficulty Modifiers

Flight Conditions	Modifier
Clear space with no navigational hazards	0
Cluttered space; light starship traffic; minor obstacles	+5
Crowded space; moderate debris field; narrow passage; reasonable traffic	+10
Combat zone; dense traffic; heavy debris	+15
Hazardous space; asteroids; starship wreckage	+20

Note: Base movement difficulty depends on speed.

Space Units

"Space units" are an imaginary measure of distance in space that promotes a more cinematic feel to adventures. Gamemasters may define this measure as any value that they feel is appropriate for their games, though numbers between a few hundred kilometers and a few hundred thousand kilometers would be most suitable for emphasizing the size of space.

limited fire arcs, pilots might have to make a successful roll to maneuver into a favorable position from which gunners can fire. (Firing counts as a separate action from piloting.)

Small craft in space or atmospheric flight can attempt other maneuvers besides those listed on the "Stunt Difficulties/Modifiers" chart in the *D6 Space* rulebook. The following entries describe several starfighter combat maneuvers and the advantages they afford if successfully executed. (All modifiers are to the speed difficulty, including any other modifiers.)

Break (+10 difficulty): A craft with an enemy on its tail can attempt to break away, flying out of the adversaries' forward field of fire. If successful, the breaking ship peels off and the pursuer must make a new roll to reacquire his prey.

Inside Turn (+10 difficulty): Dogfighting vessels often chase each other's tails, attempting to fly in tighter circles to bring the other into the range of fixed, forward-firing guns. Success brings the enemy craft into one's field of fire.

Overshot (+15 difficulty): Craft under pursuit can try slamming on the retro thrusters, allowing attackers to overshoot them and come into range of fixed, forward-firing guns. Captains must make a *piloting* roll with a +15 difficulty modifier to reduce their speed by two levels and maneuver out of the way of the pursuing ship. Failure sends the ship spinning out of control for at least one round or until the captain regains control (on a Moderate *piloting* roll); serious failure (by more than 10 points and with a Critical Failure) causes both vessels to collide.

Retro Skid (+20 difficulty; space flight only): Fighters with fixed forward-firing weapons cannot normally shoot at pursuers. By making a *piloting* roll with a +20 difficulty modifier, the captain can use thrusters to spin the ship while maintaining forward momentum, essentially flying backwards and bringing pursuers into his field of fire. Ships hit while performing this maneuver immediately careen out of control until the captain regains stable flight (on a Moderate *piloting* roll). To pull out of this configuration and engage in normal, forward-flying operation, the captain must make a Very Difficult *piloting* roll or lose control of the craft.

Flying in Formation (+5 difficulty): Fighters flying in formation often gain advantages based on their configuration. For a unit to maintain formation, every maneuver for each captain increases by +5. Failure breaks up the formation and eliminates any bonuses from their flight pattern. Several generally accepted formations confer different advantages:

Vee: Two rear wing ships flank a forward central leader in an inverted V shape. This arrangement allows the leader to spot targets, adjust course, and engage foes, while the wing ships cover him. In this formation, the wing ships gain a +5 *sensors* bonus to notice enemy craft attempting to pursue or outflank the unit.

Box: Also known as the Finger Four or Wingman Pairs formation, this arrangement puts two fighters in the forward position, followed behind and slightly to the side by two wing ships. While maintaining this formation, the wing ships gain a +5 *gunnery* bonus the first round they attack any enemy craft engaging the lead vessel.

In-Line: Commonly called Follow the Leader, this formation puts all craft in a straight line behind a lead ship. When engaging a single target, it concentrates defensive fire on the lead vessel, which peels off after attacking so the subsequent, undamaged fighters take turns firing. All but the lead ship gain a +3 *gunnery* bonus when attacking from this formation.

Fleet Maneuvers

Since a fleet operates as a large group of individual vessels, maneuvers in formation become more complicated. To properly execute a fleet maneuver (including assembling in formation), the overall commander must make an Moderate *command* roll, modified by the conditions for the skill's sample difficulties on page 88 of the *D6 Space Rulebook*. A single *command* roll (again, modified by circumstances) determines the initiative for the entire fleet.

Aboard large vessels, each captain under the commander must make an Easy *command* roll to effectively order her crew to perform the maneuver; helm operators must then make successful *piloting* rolls with difficulties based on speed, modified by various conditions (including any maneuver modifier), with a +5 difficulty modifier for maneuvering in formation. When a single commanding pilot controls the ship's helm, simply make the *piloting* attempt; the command roll isn't necessary. Any

Space Stunts

Difficulties and Modifiers

Stunt	Difficulty
Docking/landing at a friendly facility*	6
Regaining control (in situations other than ramming or sideswiping)**	15
Sideswiping**	10
Easy turn	5
Fast 45-degree turn**	9
Fast 90-degree turn**	15
Fast 180-degree turn**	21
Condition	**Modifier**
Ramming	+10
Unlimited landing area	-3
Limited landing area	+3
Almost no landing area	+6
Rough or unsteady landing area	+3 or more
Climb or dive of 45 degrees or more from current direction	+6 or more
Flying in formation	+5
Break	+10
Inside turn	+10
Overshot	+15
Retro skid	+20

** If docking or landing at* cruising *speed, add* 3. *Otherwise, add the speed difficulty to this difficulty.*

*** If attempting these maneuvers at speeds higher than* cruising, *add the speed difficulty to this difficulty. If performing these maneuvers at* cautious *speed, subtract* 3.

File Name: Travel and Combat
Notes: Practice my retro skid stunt.

Tracking Starship Movement _

Gamemasters can use minis, counters, or other handy materials to keep visual track of ship locations during space battles. Most toy stores have small space- or aviation-themed toys that can represent fighters, freighters, and capital ships in the game. Some wargames produce lines of vehicles and ships. The artistically inclined might draft their own minis: flat counters, folded tent cards, or complex cardstock models. Even common items found around the gaming table — dice, coins, game pieces, pencils — can represent vessels and obstacles in combat. Mats or boards using dry-erase pens offer a surface for noting ship positions, speeds, and actions.

Gamemasters should allow players to move and position pieces representing their ships, adjusting them according to rules and skill rolls so everyone knows where everything stands. Impose a standard scale; one inch, five centimeters, or one square equals one space unit works best. Consider this the sensors display aboard the heroes' ship, which tracks all nearby movement. Gamemasters might withhold notations for hidden or undetected craft, and they might remove the visual aids altogether if the sensor system goes offline.

failures mean individual vessels go out of formation, negating any advantages.

Although other fleet formations exist, commanders usually favor three.

Fleet Box: Like the fighter formation, this arrangement puts two capital ships in the forward position, while two cover ships hang back and slightly to the side. In this formation, the rearward ships gain a +5 *gunnery* bonus when attacking any adversaries engaging the lead vessels until they themselves become engaged by enemy craft. Commanders often arrange their fleets in several boxes, sometimes creating a broad assault line.

Fleet In-Line: This attack formation mimics the fighter strategy. A lead craft — often a particularly heavily armed and armored capital ship — leads a line of vessels, shielding those that follow from fire from the target dead ahead. When within adequate weapons range, the ships peel off to attack, having survived the initial onslaught of defensive fire behind the lead craft. All but the lead ship gain a +3 *gunnery* bonus the first round they attack the chosen target from this formation. Should enemy craft break through and engage any craft behind the lead vessel, the commander must decide (and issue orders) whether she wishes the fleet to hold formation or break to directly confront the flanking attackers.

Fleet Swarm: Commanders can arrange their vessels in a broad wall with a bearing perpendicular to the target. This enables all ships to come into firing range about the same time against concentrated enemy formations or single vessels, focusing firepower and swiftly eliminating them. If successfully executed, all ships in the formation may fire at the chosen target at the same time and range. At minimum, the target uses one damage resistance total against each attacking vessel's damage total. The gamemaster also may include an additional bonus to each skill and/or damage total for a particularly well coordinated maneuver.

This maneuver works particularly well against fleets flying the in-line formation.

Movement Failures

A character failing a *piloting* roll while changing speeds, attempting maneuvers, or otherwise flying the ship loses control of the vessel for one round. The vessel might collide with obstacles or other craft nearby — see the "Speed Damage Modifier" and "Collision Damage Modifier" charts for results. If an immovable force or solid obstacle doesn't stop the vessel that round, the pilot may attempt to regain control (a base difficulty of 15) on the subsequent round. The craft remains unmanageable until the pilot successfully regains control.

Lightening the Load

Obviously, a cargo bay filled with goods masses more than one that's empty, but keeping track of a ship's mass-to-drive ratios gets complicated quickly. Thus, for every full 20% of the ship that's empty or depressurized, the pilot receives +1 to her *piloting* total. (Of course, those who need to breath in depressurized areas must to be in enviro-suits or they suffocate.)

These guidelines, while not entirely realistic, serve well enough for quick calculations.

Boarding

Personnel on one craft may have need to board other vessels in the absence of any traditional spacedock facilities. Pirates swarm aboard disabled prey to pillage valuables. Rescue parties establish escape docks to evacuate personnel on severely damaged vessels. Customs inspectors board both cooperative and noncompliant freighters to examine cargo. Corporate and criminal ships dock in deep space or remote reaches of systems for clandestine meetings.

Several methods exist for coordinating boarding maneuvers.

Shuttlecraft: Ships with docking bays and shuttles can ferry personnel between them. Docking a shuttle within a landing bay requires an Easy *piloting* roll (assuming a *cautious* speed). This method is the easiest means of boarding another craft.

Mated Airlocks: Personnel can pass between vessels through a seal formed with exterior airlocks on each ship. One craft must maneuver alongside the other, match airlocks, and activate the seal. Ships with boarding tubes can extend these pressurized corridors to allow personnel access to an exterior hatch, including escape airlocks intended only for egress and maintenance access panels. This method requires the captain of one ship to hold his vessel stable while the other matches speed and makes a Moderate *piloting* roll. Add the craft's Maneuverability dice and modify the difficulty for any extraordinarily adverse or favorable conditions. (For example, boarding tubes greater than six meters long add 1 to the difficulty for each additional six meter.) The vessels remain mated at the airlock until they mutually deactivate the seals. Should either craft sustain damage in combat, pilots must adjust their attitude in relation to

the other vessel by making a *piloting* roll greater than or equal to the amount of damage sustained (regardless of how well the ship holds up). If this roll fails, the airlocks tear apart; although the inner hatches maintain pressure, the outer hatches and seals remain permanently inoperable.

EVA Boarding: When other boarding methods aren't possible, personnel don spacesuits and undertake extravehicular maneuvers to reach another vessel. Characters can use their *flying/0-G* skill to traverse open space between ships, but in most cases, anchored tether wires link both craft near serviceable airlocks, ensuring safe personnel transit. Personnel shuttle between them with their enviro-suits secured to the lines to avoid drifting off. Although tethers limit movement along the cables, they modify the difficulty of *flying/0-G skill* attempts by -5. The vessels remain tethered until someone severs the wires or deactivates the anchors. If either craft takes damage in combat, the captain must correct her ship's attitude to maintain the tether link by making a *piloting* roll greater than or equal to the amount of damage sustained. If this roll fails, gamemasters should randomly determine if the cables go slack (increasing the difficulty of personnel moving along them by +10), or go taut and break (possibly spilling personnel into open space, or trapping them on the other vessel).

Forced Entry: Boarders resort to more severe methods when hatches remain stuck, damaged, locked, or inaccessible, or when a disabled ship does not wish to accept hostile boarders. A ship must first successfully maneuver to establish a mated airlock link or EVA tether. Although boarders can force an entry by cutting hull plates with plasma torches or trying to circumvent security control panels at airlocks, most break through using explosives or a fast-burning welding paste. Entering through an existing hull breach also allows access to depressurized sections of the vessel.

Towing

Sometimes one ship needs to tow another, disabled vessel. Captains usually achieve this in normal space by applying tractor beams, magnetic grapples, anchor tethers, or other methods to secure the craft together. Assuming the disabled ship does not resist towing efforts, another vessel may haul it. Towing another ship halves the Move rate, doubles the energy units consumed at any particular speed, and increases the difficulty of any maneuvers by +10. Gamemasters can adjust this to reflect the relative sizes of each vessel.

Towing craft across interstellar space isn't so easy. Most assembly facilities customize and lock interstellar drive field configuration to fit the shape of the individual vessel for maximum operational efficiency. Ships disabled in deep space must either fit into a rescue vessel's enclosed docking bay, or wait for a specialized tow craft that employs special field generators to engulf the disabled ship within its interstellar drive configuration. Most deep-space salvage craft incorporate at least one enclosed bay for docking and disassembly, though larger recovery vessels have special programs that allow them to reconfigure their drive's fields to haul larger ships using their interstellar drives.

A doubling of the field allows the ship to engulf other ships up to half the recovery vessel's size into the expanded field. It also uses twice as much power as normal. It can also be a little trickier to make the navigation calculations, with larger towed ships making the situation more challenging than smaller ones.

Space Combat

Interaction between space-faring craft is not limited to peaceful sensor sweeps and communications. Combat inevitably results when captains disagree with each other's objectives: patrol commanders hunting down pirates, customs officials chasing smugglers, fighter squadrons engaging enemy gunships, or explorers and aliens misinformed by translation difficulties.

Combat Duties

Everyone plays a role in starship combat. Captains maneuver for good positions using their *piloting* skills and their ship's Maneuverability dice (if any). Sensor operators scan the area for targets and threats. Comm jockeys communicate with other friendly vessels to coordinate strategies and avoid friendly fire. Engineers repair damaged systems. Gunners engage targets with their craft's weapons.

Players should determine beforehand what stations everyone's character normally crews during flight and in combat. Although this might stereotype some heroes, it helps everyone quickly dive into combat. For instance, the pilot and co-pilot occupy the relevant stations in the cockpit, while someone else operates the sensor and comm boards (usually in the same area). Gunners take their places at their weapon controls. Technicians stand ready in the engineering spaces to handle damage as it occurs.

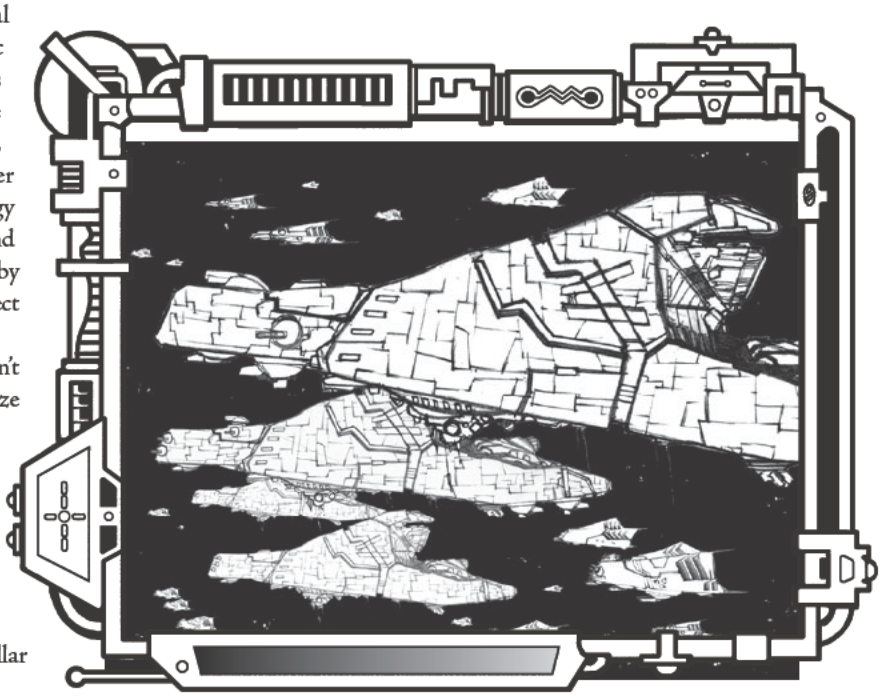

Running Mass Space Battles _

Gamemasters have an overall view of any mass battle, from small skirmishes to vast fleet actions. Heroes, however, only view their limited perspective. To bring a huge battle alive, gamemasters must distill larger events to the characters' level.

Take a large fleet engaging a pirate force. The action involves several capital ships and a few fighter squadrons on each side, plus a few retreating pirate freighters. After the initial long-range salvos, the confrontation degenerates into a confusion melee, with pirate vessels protecting their cargo ships, fighters seeking soft targets, and cruisers slowly closing in through the fray.

Gamemasters should break down this overall strategy into individual encounters that can affect the overall outcome. Say the heroes are part of a fighter squadron hunting the pirates. As they fly out to engage the enemy, they must first dodge the opening rain of shots traded by both sides. They peel off to engage pirate snub fighters intent on striking the cruisers, diving into several individual dogfights. After dispatching some fighters, they close with a pirate frigate intent on ramming the lead cruiser; if they fail to stop the frigate, it might seriously impede the other cruisers' progress. Once they eliminate this threat, they can weave through the pirate lines to disable the cargo vessels.

Gamemasters can break down such large battles from the perspectives of fighter squads, capital ship crews, and even boarding parties, making sure everyone has some obstacle or adversary to overcome before proceeding to the next challenge and ultimately victory or failure.

Not every hero finds their place aboard ship. Some don't have the necessary skills, others can't find any open positions. Nonetheless, gamemasters should involve everyone during space combat. A spare hand might hastily try calculating new coordinates to a system to which the ship can retreat if necessary. Someone could assist the engineer fetching parts or holding tools. Does someone need to look after or reassure any passengers, or check up on cargo that might sustain damage? A person at the computer could identify adversaries, find information on worlds to uses for shelter or repairs, or search for nearby astrographical hazards that might offer cover.

Even if a character refuses to become involved, gamemasters shouldn't let them sit out the fight with nothing to do. Perhaps they're trapped in a damaged part of the ship and must escape. Maybe the fight disturbs their preferred activity. If even this fails, gamemasters should still check with heroes to see if they wish to undertake any actions, even if they aren't related to combat.

Mechanics of Combat

Hitting a target requires a *gunnery* roll equal to or greater than a base difficulty number of 10, modified for various conditions, including range and any active full or partial defense maneuvers. Some ships have upgraded targeting computers that give gunners bonuses to their roll. Gamemasters should determine the difficulty, taking into account all conditions, then players should make the *gunnery* roll and determine its success.

Each weapon lists its range in space units, shown as short, medium, and long (with short defined as one space unit to the listed number). Most starship-mounted weapons cannot target enemies less than one space unit away. Consult the "Space Combat Range Modifiers" chart to adjust the difficulty number to hit a target based on its distance.

Targeted captains may use their *piloting* skill as characters would *dodge*. If they forego all actions in a round, they may make a full defense, adding their *piloting* roll (plus the ship's Maneuverability modifier) to the base difficulty of 10. If they engage in other activities while maneuvering the craft out of harm's way (such as attempting a stunt), they can make a partial defense; their *piloting* plus Maneuverability roll becomes the new difficulty for attackers to hit them. These conditions are cumulative with any range modifiers.

Starships may also take cover behind nearby objects — asteroids, capital ships, space stations, debris, or the like — assuming their captains can make *piloting* rolls to reach them. Use the cover modifiers from page 73 of the *D6 Space* rulebook as guidelines.

Damaging Parts of a Ship

Instead of making a general shot at a target, some ships find it more effective to go after a small portion of a larger ship. This adds a called shot modifier of +1D (+3) to the difficulty, but the attacker may now use the scale of the small target instead of that of the whole vessel. Unless otherwise specified in a description of the part (or at the gamemaster's discretion), the target has a Toughness equal to its vessel's Toughness (including armor and shields). Generally, a damage total of 13 or more destroys the part, though it has no effect on the larger ship (except that it can no longer use that part). Of course, if the target happens to be a weak spot, the larger vessel could be in serious trouble ...

Targeting Projectiles

Mines, missiles, torpedoes, and probes have a scale value of 5 for purposes of targeting or defending against them. They resist damage with a Toughness of 3D. Beating the Toughness by one to nine points makes them to go off prematurely, causing their damage (not including scale modifiers) to anything within one space unit of them. Exceeding the damage resistance total by 13 or more obliterates them.

For purposes of determining damage, a projectile's scale value is not altered by its launching ship's size.

Space Combat Range Modifiers _

Range	Modifier
Short (1 space unit to first value)	0
Medium (first to second value)	+5
Long (second to third value)	+10

Note: Most weapons can't lock on targets closer than one space unit; those that can specify that ability in their descriptions or are designated by the gamemaster.

Scale and Space Ships

A larger ship attacking a smaller ship has a modifier to its combat difficulty and to its damage. Note that the damage modifier does not mean that the bigger ship actually did more damage; rather, because the defending ship is small, it has less area over which to spread the effects of the attack, thus making it seem like more damage was done.

Shields

Although every vessel uses low level energy shielding to resist micro-meteors, debris, space dust, and the heat of atmospheric re-entry, most rely on weapons-grade shields to repel enemy fire and other serious damage.

Raising shields requires three steps:

1. Determine which sections of the ship to protect.
2. Divide shields dice among areas.
3. Determine the difficulty and roll *shields* skill.

1. Determine which sections of the ship to protect: Operators must decide over which quarters of the vessel to deploy shields. They may choose any combination of forward, aft, starboard, and port. For instance, a fleeing craft might raise shields aft to deflect fire from pursuing adversaries. A ship charging into battle might activate shields fore, starboard, and port.

2. Divide shields dice among areas: Ships have shield die codes representing their strength. Divide these dice and pips (remembering that each die has three pips in it) among the protected areas. If shields cover only one area, use the full die code when absorbing hits. If a ship with +2D shields raises them over three areas, the operator might divide the strength evenly as +2 or unevenly as +1D+1 forward, +1 starboard, and +1 port. Areas not covered by shields take hits directly to the hull and do not add any shields dice to resist damage.

3. Determine the difficulty and roll *shields* skill: The difficulty to successfully deploy shields depends on the number of areas covered, as shown in the "Shield Deployment" chart. The more areas to protect, the more the operator must scramble to angle the deflectors, divert energy to the proper generators, and successfully activate the system. Success brings the shields online with die code strengths determined earlier. Failure represents the inability to raise shields adequately, allocate power resources, or channel the deflectors over the proper quarters. Operators may try again next round.

When a quarter protected by shields sustains a hit, add the shield die code allocated to that area when rolling the ship's damage resistance total (which also includes its hull Toughness, armor, and, possibly, scale modifier).

Shields remain deployed until powered down, overloaded, or damaged. Deflector generators overload when any section protected by shields permits more than three times the current setting die code of damage to get through (not including pips). The shields shut down, and the operator must spend another round reactivating them. Damage that penetrates the hull may also disable the shields temporarily or permanently. The greater the damage, the more likely this is to happen.

Shield Deployment

Number of Areas	Difficulty
1	10
2	15
3	20
4	25

Tractor Beams

Vessels equipped with tractor beams may use them to capture other ships. These energy fields inhibit movement and often draw one craft closer to the other.

Locking a tractor beam onto a target requires a successful *gunnery* roll. Compare the beam's "damage" against the target's hull Toughness (taking into account scale modifiers if using optional combat rules on page 83 of the *D6 Space* rulebook). If the total is equal to or higher than the defender's total, the tractor beam gains a hold. If lower, the target manages to break free or evade the beam at the last minute.

Operators can slowly reel in passive targets for boarding actions effected through landing bays or docking gantries.

Few targets prove so cooperatives. Ships can break free if they roll their hull Toughness higher than the tractor beam's damage. If the beam's damage is greater than or equal to the hull Toughness roll, the target ship slows, drawing closer to its captor. Consult the "Tractor Beam" chart to see how the results limit the target's maximum movement rate.

Example: A vessel resisting a tractor beam at *all-out* speed fails its hull Toughness roll against the beam's damage by 12 points. Next round it can only resist at *cruising* speed (two levels less than *all-out* speed).

Resisting a tractor beam's pull sometimes damages the captured craft's drive. Ships that fail their roll against the beam's damage by 16 or more points lose all thrust and sustain severe damage (see the "Starship Damage" section for details on effects and repairs).

Tracking Energy Units

A ship's power plant output powers all onboard systems. This usually suffices for standard operations, even in combat. But when varying speeds especially, demand might overwhelm the energy unit supply, leaving some essential systems without power.

In cases where enough energy units aren't available, currently powered systems take precedence over systems just coming online. If increasing speed, raising shields, or discharging a weapon take too much power, the action simply fails. A vessel's

Tractor Beam Effect

Tractor Beam Roll Minus Hull Roll	Target's Max Move
0–3	—
4–8	1 level less
9–12	2 levels less
13–15	3 levels less
16 or more	Drives blown

computer automatically diverts power from damaged systems so energy units don't bleed off into useless machinery.

Players may wish to keep simple notes to track how much power their craft uses in various situations. They should jot down how many energy units their vessel uses under normal operation, cautious operation (power for shields and all weapons), and at various speeds. *All-out* speed consumes 4 times as many energy units as at *cruising* speed. Under some circumstances, captains might have to decide between powering the drives, raising shields, and discharging weapons.

Boosting Power Output

Red-lining a ship's power plant to generate more energy is never a good idea, but some pilots need the extra boost to survive desperate situations. A technician working in the engineering spaces must undertake this complicated procedure; captains of single-pilot craft or ships without ready access to power sources cannot try boosting the power output.

Technicians must make a *flight systems repair* roll to tap into emergency battery relays, reconfigure power flow parameters, ignite burst capacitors, and overload the power plant, increasing the number of energy units available for three rounds. The difficulty starts at 5 for a 10% increase and goes up by +5 for each additional 10%, up to a maximum of 50%. Round the energy unit increase down.

After three rounds, the power plant overloads and sustains Heavy damage; power plant output drops to half until repaired, and the craft loses 1D from Maneuverability or, if at 0D in Maneuverability, top Move speed is decreased by one level. The gamemaster may allow exceptional rolls to further increase the power, allow the power plant to sustain that output for longer than three rounds, or lower the effects of the damage.

Shutting down the power plant before the beginning of the third round reduces the plant damage to Light. Furthermore, the power plant may not be boosted until after it's been repaired.

Should the technician fail her roll, the plant generates no additional energy units, and it sustains severe damage: output drops to half until repaired, and the ship goes out of control, decelerating by two levels each round until it comes to a stop or crashes into something.

Using the Extra Power

The extra energy units generally are spent in one of two ways: to increase speed or to improve shields.

Increasing speed is fairly obvious: To go faster at sublight speeds, the in-system drive requires more power. Some or all of the energy boost can "pay" for the cost of an increased Move rate.

Improving shields requires more finessing. The engineer can provide a +1 bonus to the shield's total (not to the die code) for every two energy units she devotes to that task. This bonus is per area; if the shields operator wants to improve multiple areas, each bonus draws energy separately. If one or more shield areas are increased beyond a value equal to 5 times the number in front of the "D" for the total shield die code, the system takes damage. The level starts at Very Light and increases by one level for each additional area that was boosted beyond the max.

Example: A ship has 1D in shields. The operator wants to increase one area by +2; this draws an additional four energy units from the power plant. If she wants to give this bonus to three areas, the per-area bonus is still +2 but the energy draw jumps to 12.

Some gamemasters may also allow characters to boost the damage of their energy weapons. or the skill bonus provided by a system. This requires 3 times the normal energy for a +1D increase (see the relevant chart in the "Revised Ship Design" chapter). It also does one level of damage to the equipment for each 2D increase in effect, unless (time-consuming) precautions are taken.

Starship Damage

Gunnery rolls equal to or greater than the difficulty to hit a target inflict damage. The attacker rolls the weapon's damage die code, while the defender rolls his vessel's hull Toughness, plus any bonuses from armor raised shields in the hit quarter. If using optional combat rules, factor in modifiers for scale. If the damage total does not exceed the hull Toughness roll, the weapon only buffeted the ship, singed the hull, or failed to penetrated deployed shields.

If damage exceeds hull Toughness, compare the difference between the two and consult the "Ship and Passenger Damage" chart. The higher the damage total, the more harm the craft sustains. Crew and passengers also may take damage as shown on the chart.

Levels of Damage

Very Light damage causes the ship to lose 1D from Maneuverability for the current round and the next. Redundant systems automatically reroute power, while others reactivate after going down for a moment.

Light damage reduces the vessel's Maneuverability by 1D or decreases the top Move speed by one level. This damage remains until repaired. Minor systems blow out, straining the power plant.

Heavy damage lowers the craft's Maneuverability by 2D or drops the top Move speed by two levels. If using advanced damage allocation, various essential systems sustain damage and go offline until repaired.

Ship and Passenger Damage

Damage Total Minus Resistance Total	Vehicle Damage	Passengers Suffer...
1–3	Very Light	No damage
4–8	Light	1/4 Damage Total
9–12	Heavy	1/2 Damage Total
13–15	Severe	3/4 Damage Total
16+	Destroyed	All Damage Total

Note: All modifiers are cumulative. A vessel may take an unlimited number of Very Light and Light levels of damage. At Heavy or above, any additional level of damage above Very Light bumps the damage to the next level.

Severe damage completely disables the drives, sending the ship is out of control, decelerating it by two levels each round until it comes to a stop or collides with something. With the optional damage allocation, this damage destroys various onboard systems.

Destroyed craft never operate again — everyone onboard perishes unless they somehow managed to get in and jettison escape pods at the last moment.

Optional Damage Allocation

Gamemasters may decide to vary the results for vessels sustaining Heavy and Severe damage instead of or in addition to reducing a ship's Maneuverability dice or top Move speed.

Heavy or Severe hits may take entire onboard systems offline. Roll on the "Damaged Systems" table to see which components go offline. Ignore or reroll results for already inoperative systems.

Systems hit by Heavy damage remain inoperative for 1D rounds, or until someone makes a Moderate *flight systems repair* roll. In the case of communications, sensors, and the navigation computer, a Moderate roll in the appropriate operations skill reboots the system and brings it back online.

Systems sustaining Severe damage remain offline until repaired or replaced.

Gamemasters may also wish for starship damage to affect the heroes and their movement within their craft. Each time the vessel sustains Heavy or Severe damage, roll on the "Onboard Damage Events" chart. Although these conditions don't immediately affect the ship's flight and tactical operations, they provide additional challenges for the crew, as well as events to involve those not immediately participating in combat activities.

Gravity Offline: The vessel's artificial gravity generators go down, leaving the entire ship in a state of zero-gravity. Although crew strapped into their seats have no problem discharging their duties, anyone moving about the craft (using handholds, hatch entries, and other static features) must do so on an Easy *flying/0-G* roll.

Debris Blockage: A hit dislodges debris from a storage locker, cargo web, or blown corridor panel. Heroes seeking to pass the blockage and move to another section of the ship must first clear it with a Moderate *lift* roll or, if gravity went offline, a Difficult *flying/0-G* roll.

Onboard Fire: A power surge sparks a fire that bursts from a control panel near one of the crew. Gamemasters should choose the fire's location, or roll on the "Damaged Systems" chart to randomly determine the operator's station from which it explodes. Those coming in contact with the fire take 2D damage. By law, most ships carry flame extinguishers or fire-suppression networks, though these may be lacking due to lax enforcement or limited resupply funds. If heroes don't act to extinguish the fire, it might spread to damage other onboard systems.

Lights Burn Out: An energy spike from damage or the drives blows out all the lights, plunging the ship into darkness. Only the indicator diodes, button illuminators, and display screens on control panels provide minimum lighting. Those characters not engaged in activities at active command stations undertake all actions with a +3D (+9) difficulty modifier.

Head Explodes: A blown pipe, smashed strut, or other violent internal damage causes the waste removal system in the lavatory to explode. Anyone in the head at the time has a good chance of catching some disease or infection if they don't wash down immediately — a difficult proposition if the craft has only one head and no functioning waste removal system. Otherwise, the blown head simply stinks up the ship and complicates personal hygiene until repaired.

Life Support Down: The air scrubbers, oxygen supply, and ventilation system take a hit, disabling life support in part or all of the vessel. If not repaired or circumvented in five minutes (or if the ship doesn't land at a pressurized facility), the crew

Ship Damage Modifiers

Due to Speed

Level*	Damage
Stopped	2D
Cautious	4D
Cruise	6D
High	8D
All-out	10D

** Level at which the damaged vehicle is traveling.*

Due to Collision

Situation	Modifier
Head-on	+3D
Rear-end, sideswipe	-3D
Nose to side	0
Into something very hard	0
Into something yielding	-1D or more

Note: Modifiers are cumulative. Situation is the one in which the damaged vehicle is.

Damaged Systems

1D Roll	Damaged System
1	Shields
2	Communications
3	Sensors
4	Weapon
5	Navigation computer
6	Interstellar drive

Onboard Damage Events

1D Roll	Event
1	Gravity offline
2	Debris blockage
3	Onboard fire
4	Lights burn out
5	Head (lavatory) explodes
6	Life support down

begins to suffocate at a rate of one Body Point per round or one Wound level every six rounds. (Armor cannot protect against this; the gamemaster may limit what other Special Abilities can resist this injury.)

Sabotage

Adversaries sometimes seek to disable or destroy vessels by sabotage. Corporations plot to delay their competition. Pirates hope to disable freighters with valuable cargoes in favorable ambush zones. Military forces incapacitate enemy shipping while avoiding direct confrontation in battle.

Sabotage involves infiltrating a ship and rigging its components to malfunction or explode. Two approaches accomplish this effect: setting explosives or jury-rigging the craft's existing systems (such as the drives, power plant, or weapons).

Explosives: Using the *demolitions* skill, characters can set explosives to detonate at a given time, under predetermined conditions, or when a particular ship's system activates, depending on the type of trigger device used. This requires a Moderate *demolitions* roll, with a +5 modifier to the difficulty for each +1D of additional damage desired. Other modifiers from "Example Skill Difficulties" for *demolitions* on page 89 of the *D6 Space* rulebook may also apply. In most cases, an explosive deals damage to a specific ship's system near the blast. Assume that most components possess from 3D to 4D Toughness for purposes of determining damage effects. Gamemasters might wish to use the optional scale modifiers on page 83 of the *D6 Space* rulebook if the explosion affects the entire craft.

Planting charges near a particular system requires the saboteur to successfully infiltrate the ship. Setting explosives on exterior components seems easier, but has less-predictable results; in these cases, treat blast damage as if it were dealt against the vessel's hull Toughness and not a specific system.

Jury-Rigged Sabotage: More subtle methods of sabotage require more artistry than simply blowing up parts of a ship. Skilled technicians can rig starship systems to malfunction — sometimes violently — using materials available onboard: spare parts, tools, and existing components. This requires a base Moderate *flight systems repair* roll, even though the actual work resembles more destructive modifications than repairs. Gamemasters can adjust this roll based on the saboteur's familiarity with the craft, available parts, desired effect (from simple system deactivation to full-out explosion), and the degree to which such tampering remains hidden from the crew. This approach almost always requires internal access to the target vessel, putting the saboteur in danger of discovery. The ultimate results depend on the saboteur's purpose. In some cases, specific systems simply malfunction at particularly inopportune moments for the crew: the shields go down in the midst of a battle, the interstellar drive malfunctions before a jump, weapons lock up. Saboteurs may also try to permanently disable or destroy these systems without compromising the rest of the ship. Other times jury-rigged modifications cause massive explosions within the hull, usually the result of causing power feeds, emergency batteries, and burst capacitors to overload near other sensitive components. In this case, increase the *flight systems repair* difficulty by +5 for every +1D extra damage, assuming an exploding component causes 2D to 3D base damage.

Detecting Sabotage: Crewmembers performing checks for tampering must successfully search the correct area sabotaged. They must make an opposed roll using *Perception* (with a +5 difficulty modifier), *flight systems repair*, or *search* against the saboteur's *demolitions* or *flight systems repair* total. Attempts to further conceal sabotage may increase the difficulty to spot it. Alert heroes might also spot saboteurs in the act, especially if they must enter the craft to effect their destructive modifications.

Self-Destruct

Under certain circumstances characters may wish to set their ship to self destruct.

Most military and espionage craft possess integrated scuttling protocols, often controlled directly from the bridge or cockpit and needing little more than a key or code to initiate. Deactivating such self-destruct measures without the proper authorization requires a Very Difficult *computer interface/repair* roll if making the attempt at the primary controls, or a Very Difficult *flight systems repair* roll if trying to disengage scuttling hardware at the main drives. Don't forget to add any modifiers for rushed actions or other stressful conditions.

Vessels without integrated self-destruct mechanisms require a bit more work to scuttle. Captains often find some way to set the drives to overload; in most cases, the trick is to set them to explode after everyone escapes the ship. The technical aspects of blowing the power plants (or some other explosive part of the craft) requires a Very Difficult *flight systems repair* roll. Timing the destruction sequence according to one's own preferences requires a Difficult *computer interface/repair* roll. Failing either can result in premature detonation, no overload at all, or some disabling but not fully lethal effect.

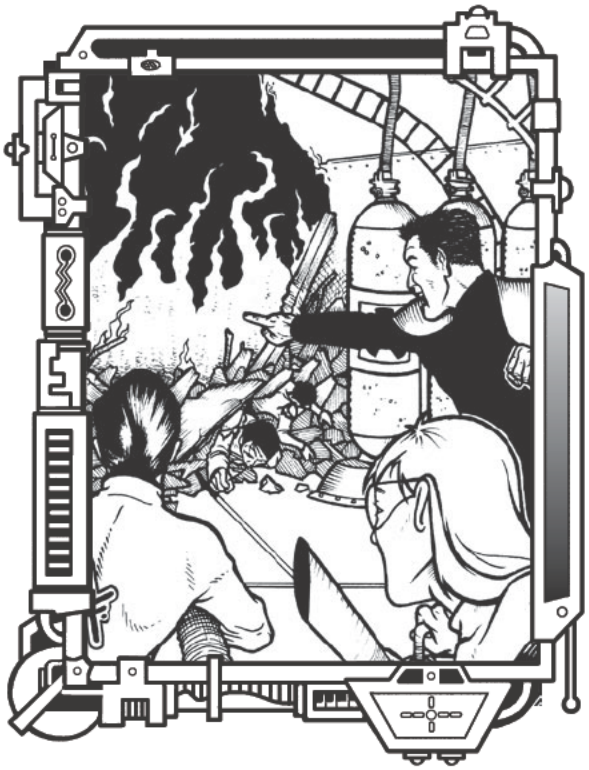

Revised Ship Design _

What's in this Chapter

This chapter refines and elaborates the basic system presented in chapter 16 of the *D6 Space* core rulebook. Some parts have been modified for clarity and to allow greater flexibility in ship design.

The ship design system involves a lot of imaginary science, particularly with such components as equipment that can offset inertia and propel the ship between the stars. Most characteristics are purposely vague, to allow gamemasters to include their own technobabble for how it all works. Gamemasters are encouraged to tailor this system to their own setting by altering costs, restricting the available components, and adding their own modifiers for alternate gravities, fluctuating power levels, and so on.

Keep in mind that in most science fiction universes, there are thousands of variations on the equipment listings herein, and an equal number of totally unique pieces of equipment. Aliens, strange scientists, and accidental engineers employ technology that just doesn't fit into the standard descriptions.

The gamemaster and the players can collaborate to produce new, more or less effective, and unique equipment. To do so, start with what you have here and modify. To keep the situation balanced, you might also want to build in "prototype flaws" or "alien technology issues" — maybe on a Critical Failure, the weapon changes targets randomly or the ammo loader refuses to drop the next missile into the rack.

Furthermore, not all pieces of equipment **should** be identical. Gamemasters can prevent their players from getting complacent — "Oh, it's only got a light laser — damage of 6D. We can take that in our sleep." They should always be guessing — did the pirates boost the damage? Is it really a laser? What are those funny "bumps" on the side of the ship — did someone figure out a new way to channel more energy through the weapon?

This also gives players incentive to follow up rumors and leads on buying new or improved equipment, and try to improve their own. The gamemaster may impose "caps" on what they can get or do — for now. A good ship owner will probably spend thousands of credits just following up a dozen different leads on new gadgets and gizmos, hoping even one pans out big.

Imposing Limitations

As with most of the *D6 System*, the space ship design rules leave a lot of room for creating almost anything in any setting. This works fine in some settings, but for others, gamemasters should come up with limitations to make the vessels best fit their universes. A few suggestions include imposing a maximum movement rate and/or Maneuverability; limiting the size or shape of vessel that can have atmosphere capabilities; and imposing increasing costs on adding large amounts of shielding or sizable power plants to big ships.

Using the Ship Design System

With this system of modules with defined parameters, nearly any type of space-faring vessel can be created. There is an almost infinite variety of module combinations possible, and your designs can be as complex as you are comfortable with.

You can find two worksheets — for the four- and three-factor systems and one for the freeform system — in the back of the book.

Steps

1. Pick a design method, which will help you decide how much information to include in the design log.
2. Photocopy the appropriate "Ship Design Log" on pages 91–95 and page 96 of this book, or print out a copy from the Web site.
3. Determine the size of the crew and the number of passengers (prisoners, guests, support personnel, scientists, etc.). See the sidebar for crew suggestions.
4. Look through each section of this chapter, following along with the design log, noting your selections on it and figuring

Crew _

A single person can run any size ship — she just won't do a good job about it. Each additional task she must perform in a round counts as an action, with serious penalties mounting. That's why military vessels often have three or four crewmembers each for commanding, piloting, sensors, communication, engineering, system repairs, and each of the weapons. (Having multiple persons for each position allows crewmembers to get adequate rest.) They'll also have additional people to cook and clean for the other crewmembers.

Similarly, large research or exploration vessels include scientists, instructors, lab technicians, and others.

any calculations necessary (such as total price for a room larger than the base size).

5. Subtotal each page, which will help you determine an adequate size for the power plant, the hull size, and other features.

6. If desired, you can add special features from Chapter 3, "Quirky Ships."

7. Write a background for the ship.

8. Sketch out the appearance of your ship on separate sheet of paper.

9. Enjoy your ship!

Design Method

Four-Factor Design

If you want to go through the system and use all of the variables, lay out your vessel design on graph paper, designating each square as a meter on a side. Arrange the modules as you wish, making sure that each module takes up the required number of units, and that each connects directly to another module. You'll need to keep track of four factors: area, mass, energy units., and cost (These terms are explained later in this chapter.)

This system works best for small to medium ships.

Three-Factor Design

For large ships, you might find it easier to only keep track of three factors: mass, energy units, and cost. (You could also ignore cost, multiplying the total mass by 700 credits to get the total price, but you'll end up paying more. It's the nature of not shopping around for the best deal.)

Select the modules you want, adding four to six hallway modules for every room on the ship (regardless of the actual size of the room). This amount serves as a good average of wide corridors, narrow accessways, and lifts between levels.

Example: Two bridge modules bought to make a larger bridge counts as one room. A bridge and a duty station bought and intended for different parts of the ship count as two rooms.

Divide the total mass by 2 and round up to get the number of area units in the ship.

Freeform Design

You can also opt for a more freeform approach, in as detailed a fashion as you want. You could go so far as to select modules and assign whatever size you want to them. At the least, you should figure out values for crew, passengers, cargo capacity, life-support supplies, in-system and interstellar drives, Maneuverability, hull Toughness, armor, shields, weapons, length, and scale. A "Freeform Ship Design" log has been provided for you at the end of this book.

If, upon later examination, the modules selected don't add to a ship of the desired size, consider that the extra space is taken up with spare parts, cargo holds, leisure rooms, and passenger accommodations — perhaps even hidden compartments.

Most ships designed using the freeform system may have a Move no greater than 8 and a Maneuverability no greater than 3D. Gamemasters may allow different maximums, depending on the setting or the number of weaknesses or problems the vessel has.

Naturally, the gamemaster has final approval over the design of the vessel, whether it's made using the guidelines presented in this book or not.

Ship Roles

The design process always begins with a determination of the ship's purpose. Given the astronomical expense of designing and constructing of a star-faring vessel, most ships are very specific in their roles. It's simply too costly to build a vessel that can fulfill many roles, so shipwrights concentrate on a particular job for the vessel, whether that be in-system defense (requiring a focus on weapons and defensive systems, but with no need for an interstellar drive), or long-haul cargo transportation (requiring ample storage space and a large, dependable interstellar drive).

Once a ship's purpose has been decided upon, you can take notes on general ideas for the details: the crew complement, the passenger space, and the types of drives, armor, and weapons. Use those notes, along with a copy of the Ship Design Log, and go through each section of these rules, entering the details on the log. The worksheets included with the Ship Design Log can help you figure out the space, mass, energy requirement, and cost totals for each aspect of the vessel.

Note that it's a rare case that modules are added after ship construction. Designers often add additional bulk cargo space to allow future captains room for expansion.

The following entries describe the common roles that many vessels fall under, as well as the design considerations that should be kept in mind for those roles.

In-System: The vessel is for use within a particular solar system, and as such, no interstellar drive is necessary. This is not a role, but rather a qualifier of another role. In common parlance, spacefarers often refer to in-system craft as "spaceships." Design considerations include no need for an interstellar drive.

Interstellar: The vessel is intended to travel between solar systems. This is another qualifier of a role, rather than a role itself. In common parlance, spacefarers often designate interstellar craft as "starships." Design considerations include an interstellar drive.

Fighter: Fighters are most commonly small in-system vessels used for combat, which launch from planetside, orbiting defense stations, or starfaring carriers. Some larger fighters can be fitted with interstellar drives themselves, but the space and cost is better spent on weapons and defensive systems. The role of a fighter is to act against other similar craft or (in groups) against larger vessels. Design considerations include one or two crewmembers, large in-system drives (for speed), and as much armament and defensive capability as the vessel can carry.

The bomber version of the fighter carries projectiles (such as torpedoes and missiles) as its primary weapon, rather than energy weapons. The role of the fighter-bomber is to target larger vessels or stations, or stationary ground-based targets. Design considerations include two crewmembers (a pilot and a bombardier), an in-system drive, and projectile weapons.

Shuttle: This is small vessel (usually under 100 tons) used primarily to ferry passengers back and forth between destinations. Shuttles are most commonly in-system vessels and used for ship-to-shore or ship-to-ship transportation. Design considerations include one or two crewmembers, large-capacity passenger seating (or accommodations on longer voyages), and in-system drives.

Gunboat: Also known as a drop ship, this combat vessel is an armed shuttlecraft whose primary role is to ferry combat troops to their destination, and to provide weapons support once there. Some governments use gunboats as in-system interdiction craft, intercepting smugglers and engaging in anti-piracy operations. Design considerations for a gunboat include accommodations for passengers (in this case, the troops or boarding party that the vessel carries), an in-system drive, and a good balance between weapons and defensive systems.

Scout/Survey Craft: This vessel is used primarily to engage in exploration or survey. Those without interstellar drives are often dropped off by a larger ship and picked up months later. They require accommodations for the crew, storage for items or (in the case of rescue craft) ships, and a drive suitable for atmosphere use. Design considerations include accommodations for the crew, lab space for scientists, storage for samples and items they pick up along the way, and a large, dependable interstellar drive. Armaments are few, but many scouts have considerable defensive systems, as you never know what you're going to run into in the cold depths of unexplored space.

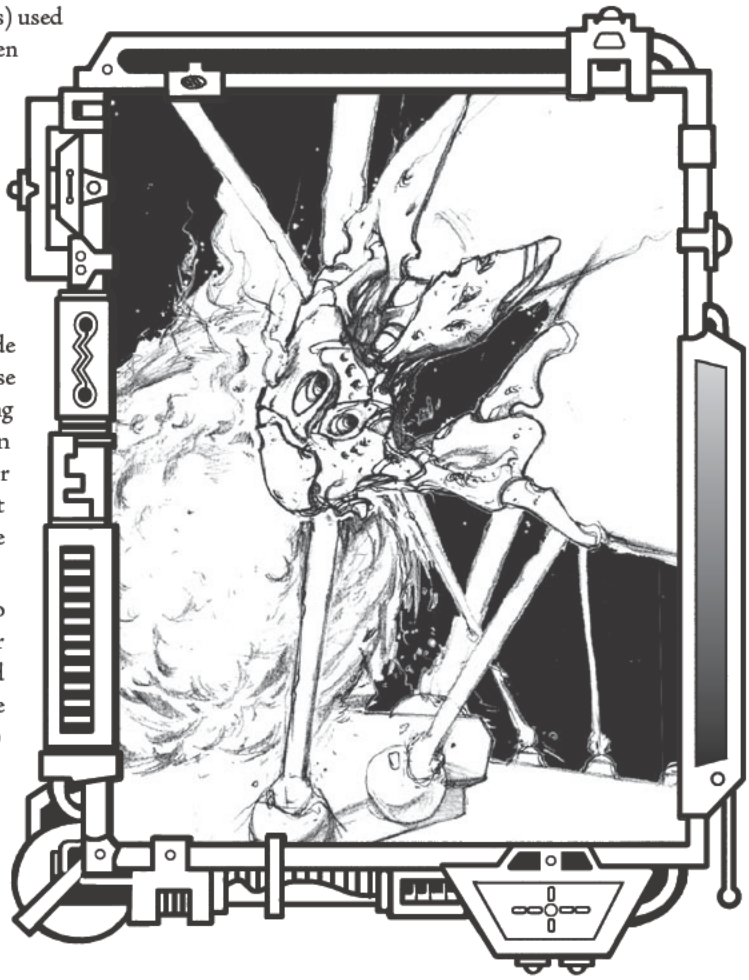

Yacht: This luxury vessel is owned by only the wealthiest citizens or corporations. The key word here is luxury. Design considerations include comfort as the primary goal — staterooms that are many times larger than required, massive lounge areas, gardens, exercise facilities, and so on. They may be fitted for in-system or interstellar travel.

Patrol Ship: This is a military or police vessel whose primary purpose is the control of a particular zone of space. These vessels are used for border defense (preventing anyone from crossing their patrol zone), anti-piracy (protecting merchant freighters against attack), or customs (intercepting and inspecting any vessel crossing the zone). Design considerations include heavy armament and defensive capability (as you would expect with any military vessel), as well as long-term accommodations for the crew, who often stay on patrol for extended periods. Add large in-system drives to generate speed and maneuverability and turn this into an interceptor.

Freighter: The workhorse of any interstellar society, a freighter is a vessel designed to carry cargo from one location to another, forming the backbone of trade and communications throughout the galaxy. The primary design consideration, naturally, is cargo space, with other considerations varying, depending upon the whims of the owner. Some freighters possess passenger accommodations, so that they may charge to bring passengers along with them on their runs. Armament and defense are always present, but they vary from ship to ship, depending upon the relative safety of their cargo routes. Ships that commonly travel through pirate space are more heavily armed than in-system freighters that operate within comfortable reach of the local naval base.

Liner: This vessel's role is similar to that of a yacht but on a larger (and often more luxurious) scale. The liner ferries passengers through interstellar space, from system to system (though some merely tool around one system). Design considerations include huge amounts of passenger accommodations (there are often various classes of accommodations: "steerage," where passengers share communal bunks; "basic," where passengers share two-person rooms; and "first class," where the accommodations are as luxurious as on any yacht). These vessels are usually lightly armed (if at all), but they occasionally travel with escorts.

Carrier: This is vessel designed to transport smaller sublight ships from system to system. They are primarily military vessels, carrying squadrons of fighters through interstellar space. The main design considerations for a carrier are hangar and launch bay facilities for the ships that it carries, plus accommodations for the pilots and crew and an interstellar drive.

Warship: The primary purpose of this large military ship is the destruction of other vessels. Warships vary in size and role, and often similar vessels from different nations will have different names that reflect the different philosophies at work.

File Name: Revised Ship Design
Notes: So few credits.

For example, a large warship of a nation that uses its navy to protect its citizenry might be called a first rate ship of the line, whereas a similarly outfitted vessel from a more aggressive, war-like nation might be called a war striker. Briefly, though, here is a run-down of the general roles of military vessels, based on classical Earth navy equivalents:

> *Frigate*: the smallest of the capital ships, primarily used for patrol or escort duties

> *Destroyer*: mid-sized vessels, primarily used for ship-to-ship combat

> *Cruiser*: large vessels, primarily used as the command vessel for multi-ship task forces

> *Battleship*: the largest vessels, with massive armaments, used to command entire fleets

Within each of these general classes of warship, there is wide variety as well. A cruiser, for example, that is smaller than the average cruiser but still fulfills the same role might be called a light cruiser. A destroyer whose primary weapons platform are torpedoes and other projectile weapons might be called a "missile destroyer."

There is even some variance in the roles. A cruiser that has been designed to act as a satellite vessel to a battleship, rather than commanding its own task force, might be referred to as an "escort cruiser," because it's still a large, cruiser-class vessel, even though its duty is not the usual cruiser assignment.

Gravity and Ships _

All ships are assumed to have gravitic compensators (sometimes called by other names, such as inertial compensators or dampeners). These incredibly sturdy machines placed throughout a ship's hull keep the ship from being torn apart whenever the pilot makes high-G turns — and it makes life a lot longer for the crewmembers as well. Perceived gravity is simply an extra function of the system that simulates normal Human gravitic forces (things will fall toward the floor area when you drop them). Ships can be built without perceived gravity, but they may never forego gravitic compensators.

See page 72 of this book for suggestions on dealing with gravities other than 1 G.

Dropping Life Support and Gravity _

Though we call certain sections of the ship "life-support modules," this is merely a term of convenience. It may be that you're designing a small fighter and you're not interested in having oxygen or pressurization in the cockpit. In that case, the pilot had best make sure he's wearing an environmental suit (see the enviro-suit entry on page 104 of the *D6 Space Rulebook* for details on one kind).

If this is the case, the mass of each cubic meter of non-life supported area changes. Getting modules without the equipment for perceived gravity **or** atmosphere reduces the mass of the area to 0.4 tons per cubic meter. Cutting both lessens the tonnage to 0.3 tons per cubic meter.

Of course, depending upon the campaign, it's also entirely possible that warships may follow entirely fantastical naming conventions, filling star systems with "battlestars" and "birds of prey." In any case, the design considerations for a warship obviously would focus on maximum military effectiveness: weapons and defensive systems.

Terms

This chapter contains basic lists of components available for space-faring vessels. They're meant to provide a starting point from which to begin creating your own ships. Use the descriptions to come up with your own variant or new modules.

There are some characteristics of ship components that deserve some explanation before continuing on.

Area Units

The area units indicate how much space that each component takes up. Each area unit is one meter wide, one meter long, and three meters high. The mass gives a measure of how much material is packed into each area; generally, the lower the mass, the more empty space it contains.

Mass

The mass of a given component describes, in metric tons, how much material that area contains and how much that piece adds to the total tonnage of the ship. In most cases, this is not a straight weight value but more of a size and complexity value. Each component not only requires itself to operate but support systems throughout the ship to make it all work together.

Energy Draw and Energy Units

Energy units (or "eu") are the amount of power that it takes to run that component. This power comes from either the main plant of the ship or a support plant designated for that component.

The energy draw column of each module is in energy units.

Energy units hardly ever come into play, though it's possible to reroute power from some systems to others to increase their effectiveness. For game mechanics on this, see the "Ship Travel and Combat" chapter.

Cost

The prices associated with each module are listed in credits, a generic unit of monetary measurement that presumes that purchasing ships is a relatively difficult thing to do. For campaigns where the ownership of star-faring vessels is more common, divide the final cost by 5, 10, or 100 — the larger the divisor, the easier it is to get a ship.

Life-Supporting and Cargo Module Descriptions

Using this list of modules, you should be able to create a vessel that suits the role that you have determined for it.

Each square meter of a vessel's life-supporting and cargo space includes ceiling and floor panels, cables, conduits, wiring, and so

Miniaturization _

Smaller and yet equally functional versions of each module described are available (in some settings) at an increased cost. For every percentage smaller the miniaturized module is, increase the cost by an equal amount. So, a module 10% smaller is 10% more expensive. (Round all values up to the nearest 10 credits.)

on, so the open area is actually closer to 2.5 meters high, which is enough room for the average species to stand upright.

Each room, including hallways, has one pressure door to allow the area to be sealed off from the rest of the ship in case of a puncture in that area. Hallways may have protective forcefields instead of doors in those settings that allow such devices.

If you need a larger version of any module, buy the module several more times until you get the desired size.

Example: If you're building a starship with a crew of five and want the bridge to accommodate all five crewmembers simultaneously, buy the standard bridge module (which supports a single crewmember) five times. This area now supports five people, takes up 20 area units, masses 10 tons, and a costs of 500.

Buying additional modules is also the method for increasing the luxuriousness of the vessel. The modules as described are the basic models, created for maximum efficiency and minimum wasted space. If you want the crew to have more room to move around, or you're creating the opulent grandeur of a noble's yacht, then design the ship as if it were intended to support more people than it will. For instance, you could buy two "one-person rooms" to create a single "stateroom," which would feature more amenities such as a couch, a personal entertainment system, and so on.

The accompanying table lists each type of module, the number of people that the module supports, the number of area units that the module occupies, and its cost. The figures presented are for a single module of that type; multiple modules would combine their figures.

Life-Supporting Modules

Each square meter of life-supported area masses half a metric ton. This approximation is a good average between the empty parts (which have very little mass) and more complex parts, like furnishings, electrical, heating and cooling, atmosphere- and fluid-recycling, and food-processing equipment.

The energy units listed with each module show the number needed to filter and recycle atmosphere, provide heat and light, and generate artificial and perceived gravity for that area.

Airlock: Airlocks on space-faring vessels allow the crew to get outside the vessel without forcing everyone inside to put on environmental suits. Most are little more than two meters square and are sealed with doors of the same basic Toughness as the ship itself. Note that airlocks are not designed to be lived in — they can hold and support up to five people (per unit), but they do not provide food and water or sleeping areas. The module includes the inner and outer seal and all compression and decompression equipment. All airlocks require activation by the crew (whether via coded keypads, retinal scan, etc.), but they can sometimes be bypassed by unauthorized personnel through use of *security*. (The difficulty depends on the security measures used, but a value of 25 is typical.)

Boarding Tube: Boarding tubes are used to join to another ship and provide a means of getting between them. The tube is usually connected to airlocks (both purchased separately) at both ends so internal atmosphere and pressurization is rarely lost. Adding an airlock to the target-ship-side of the tube ensures that a matching airlock is not needed; the boarding tube's airlock will seal itself to the hull of the target ship.

The standard boarding tube is one meter wide and expands to six meters long, just large enough for one person at a time to walk through. It folds into half its size in the ship when not in use. Increasing the size increases the difficulty to use it.

To successfully use a boarding tube, the two vessels must match speeds. See the "Boarding" section on page 20 of chapter 1 for details.

Bridge/Duty Station, Standard: The standard bridge or duty station contains a cushioned swivel chair bolted to the floor with a computer interface and display panel in front of it and a little room in which to move around. Additional duty stations may be included by purchasing this module for the appropriate number of people. For ships with only one crew, the captain serves all duties and runs the entire ship from the bridge. In larger ships, the duty stations that control various functions (such as sensors or weapons) may be within the bridge (and represented by a bigger bridge), scattered throughout the ship (as individual modules), or both. As a luxury upgrade, bridges and duty stations can come with processors for rations of food and water for crewmembers who want to live or spend considerable time at their station. Many larger vessels place dedicated duty stations at locations throughout the ship. For example, a weapons battery may have a gunner's position linked to it, or there may be a large duty station closer to the drive systems that's used by the engineering crew.

Bridge and duty stations come with the minimum controls and computer processing necessary to get the ship moving; they give no aid to the user's abilities. To provide better sensor, communication, or processing programs, see "Module Upgrades" later in this chapter.

Bridge/Duty Station, Compact: Similar to the standard bridge or duty station in terms of function, the compact version requires that the crewmember sit, lie flat, or stand in a minimal amount of space. There is no room in which to move around in. Generally, the crewmember climbs into the area through a small opening, though this module could also represent one-person duty stations that require the crewmember to stand while using it.

Brig: This is a specialized holding cell for prisoners. It has two bunks, a single-person toilet room, a little space to move around in, and security measures, such as secure locks or a force-field generator barring the door.

Bunks, Communal: These are four bunks stacked two high with moving space between each set. The room also features a

Life-Supporting Modules _

Module	Area Units	Mass (tons)	Energy Draw	Cost	# of People
Airlock, group	4	2	0.4	300	5
Airlock, single	1	0.5	0.1	100	1
Boarding tube	3 (6)*	3	0.6	3,000	1
Bridge/duty station					
Standard	4	2	0.4	100	1
Compact	2	1	0.2	75	1
Brig	10	5	1	1,000	2
Bunks, communal	20	10	2	900	4
Coldsleep module	1	0.5	0.1	200	1
Hallway	1	0.5	0.1	25	0**
Hydroponics	1	0.5	0.1	100	-1
Infirmary	18	9	1.8	1,500	3
Laboratory	4	2	0.4	1,500	2
Leisure room	6	3	0.6	400	1
Lounge	6	3	0.6	300	1
Medical bed	3	1.5	0.3	400	1
Passenger seating	4	2	0.4	200	2
Additional space	2	1	0.2	100	2
Room, one-person	10	5	1	500	1
Room, two-person	14	7	1.4	700	2
Workroom	4	2	0.4	1,500	2

** The first number is the amount of space the boarding tube takes up in the ship; the second number indicates the length when extended. Use only the first number when calculating ship area. ** See entry for qualifiers on this.*

single toilet room, a shower, and some storage room for personal effects.

Coldsleep Module: Coldsleep modules are self-contained, self-powered, computer-regulated "sleeper-coffins," which keep the occupant standing in a state of suspended animation for long journeys (thereby requiring less life-support costs). A cold-coffin can usually operate for 25 years after the ship's power is shut down. The beds provide nutrients (at a reduced rate) directly into the sleeper's system. Adding a battery to the system (see "Power Plant" later in this chapter) can increase the amount of time the cold-coffin sustains its occupant by 25 years for each energy unit devoted to the coldsleep module.

Hallway: Purchased in one-meter-square increments, some ships use hallways to separate various rooms and allow their occupants or users privacy from others moving about the ship. This modules also represents elevators (or lifts), service corridors and tubes, and spare storage. A decent estimate of needed hallway space for wide corridors is four to six area units for every life-supporting and cargo room the ship has. (This is regardless of the number of modules used to make up the room.) Halve this if you want narrow passageways.

As long as the number of area units of hallway is less than the number of area units in other modules on the ship, the hallway has a value of zero people when determining the amount of breathable atmosphere needed. Otherwise, it has a value of one person per area unit.

Hydroponics: Some larger vessels come equipped with garden areas, hydroponic labs where vegetables and fruit are grown. The food provided by these plants can be used to feed the crew, and the plants themselves recycle the atmosphere (thus the negative value for the number of people that the room supports). Every four area units of hydroponics provides food for one Human-sized person. This provision is indefinite, though the garden requires tending and the occasional expense of fertilizing and reseeding. Larger vessels use hydroponics to cut down on the amount of life-support equipment they need to carry.

Infirmary: This fully equipped two-bed hospital has an array of medications and medical equipment, including computerized health monitors and equipment for performing surgeries.

Laboratory: This is a generic term for any sort of area dedicated to science or research. Note that the number of people is the amount of persons that can reasonably work in this area, though it may service many more. The cost includes an array of specialized scientific equipment, depending upon the focus of the lab.

Leisure Room: This room can be fitted with one of the following: audio-visual equipment plus comfortable chairs and a small selection of entertainment scholarchips; exercise equipment; shooting range with light-based weapons; observation window; meditation room or chapel; sauna; casino; or equipment for another form of entertainment (such as holographic entertainment in those settings that have them). Add additional modules of this room to create larger versions or house bigger-sized equipment (such as a pool, with a cover that folds over when not in use). This area is sometimes combined with the lounge to create a deluxe lounge.

Lounge: The basic lounge includes a table and chairs for the crew with a little space to stretch or have discussions. It does not include entertainment systems or the like. Food processing is a luxury upgrade. Lounges are most commonly used as mess facilities for the ship's crew or ready rooms for the captains.

Medical Bed: This is a smaller version of the infirmary. It contains a single bed equipped with medical sensors and medication dispensers. It's too small to perform surgeries in.

Passenger Seating: This area contains two seats designed to hold passengers for short hops (less than 10 hours). The module also has a large view screen (the contents of which the captain controls) and a single-person toilet room. As a luxury upgrade, the area can include a snack dispenser. For every additional pair of seats, add two area units, one ton, and 100 credits.

Room, Two-Person: This dormitory-style room contains two bunked beds, a single toilet room, a single shower room, two small desks, and two narrow lockers. Food processors, if included, are standard. Most crewmembers and passengers usually share two-person rooms.

Room, One-Person: As above but designed for one person. Officers, the captain, wealthy passengers, or high-ranking crew who spend a lot of time on board usually have a room of their own. Captains often have staterooms created from two of these modules, occasionally connected to a private dining lounge on larger vessels.

Workroom: This is a generic term for any sort of area dedicated to such things as small equipment repair, kitchens (for nonprocessed food), laundry services, libraries, and so on. Note that the number of people is the amount of persons that can reasonably work in this area at the same time, though it may service many more. Workrooms are sometimes equipped with food processors (especially on independent ships), though this is not standard.

Cargo Modules

Cargo space covers all extra open areas within a spaceship. This includes areas for portage and equipment, parking for vehicles or small ships, and so on. The size of the hangar, launch bay, and vehicle bay can be enlarged by up to 75% of their original size by including additional bulk space modules. (Increases of over 75% need to purchase the full module again.)

The mass of the cargo is already figured into mass of the modules, and they are fitted with gravitic compensators that offset the additional mass when the bays are loaded.

Use the "# of People" column in the "Cargo Modules" chart to determine atmosphere that each cargo module requires if the captain doesn't want the crew to be in environmental suits all of the time. This also indicates the maximum number of beings that the unit can support.

Captains who want to forego the expense of putting atmosphere in cargo space should be sure to put an airlock between the cargo space and the rest of the ship, just in case a crewmember needs to get at the area while in space. The area may be filled with atmosphere when docking at station; this costs 10 credits or more per day.

Classifications

Basic: They may have walls, doors, and power couplings, but basic sections are mostly designed for holding large amounts of ever-changing goods in many different sizes and masses. Most freighters and interplanetary haulers have thousands of tons of basic cargo space.

Segmented: This cargo space is generally designed for ships that haul the same kinds of cargo repeatedly. Ships that haul livestock, vehicles (that don't require power), or other stock most often have segmented cargo compartments. When building a ship, the designer may divide up the cargo area as he sees fit, within reason. This can include multiple gantries and walkways, cranes and lift systems, and so on. Automated systems for off loading and more sophisticated devices will have to be paid for, but portable lifts and simpler equipment are standard.

Specialized: These cargo areas include vehicle launch platforms, hangars, or any other space dedicated to a specific function. These are by far the most complex and costliest cargo spaces. They include multiple power coupling systems, terminals connected to the ship's computer, and other amenities that contribute to the section's purpose.

Types

Each ammo bay holds up to one ton of ammunition, which is already figured into the mass of the bay.

Bulk Space (basic): General cargo areas (which hold about 2.5 cubic meters per module) and personnel storage and weapons lockers fall under bulk space. They include simple power outlets and cables for bolting down stock. Bulk space used for storage has at least one door for loading and off-loading the cargo, plus another for accessing the rest of the ship.

Ship designers often include extra bulk space in their vessels because the space is so easy to convert to other types of areas after ship construction.

Exoskeleton Bay (specialized): This area can store one personal exoskeleton up to five meters tall and less than two meters wide. The area has automatic clamps to hold the suit in place, a power-recharging unit, and space for the user to get into or perform basic service on the suit.

Cargo Modules _

Module	Area Units	Mass (tons)	Energy Draw	Cost	# of People
Bulk space	1	1	0.1	25	0.25[1]
Exoskeleton bay[2]	4	8	0.8	225	1
Hangar[2] (1 small fighter)	48	108	10.8	16,000	24
Launch bay[2] (1 small fighter)	48	48	9.6	14,000	24
Livestock bay (1 animal)	3	4	0.8	900	1
Matter teletransporter	1	1	20	10,000	1
Pod bay (1 escape pod)	2	2	0.4	1,100	0[3]
Vehicle bay[2]	24	34	6.8	1,800	12

1. Life support for bulk space is purchased at a rate of 1 person for every 4 area units (round up); increase this ratio if the area is frequently occupied, such as refugee quarters or ship building.

2. Area unit is 6 meters tall with 5 meters of usable interior height. When determining total area units, count these modules twice.

3. Cost includes food and atmosphere for two months for one person.

Hangar (specialized): A hangar holds a fighter-sized craft that's up to four meters tall, takes up 30 meters square, and weighs no more than 60 tons. (Combine two instances of this module to create one appropriately sized for a shuttle.) It includes room for minor maintenance. At least one launch bay is required in addition to hangar space, though one launch bay can serve a large hangar made of several of these modules.

Launch Bay (specialized): This bay can launch a single fighter-sized ship no more than four meters tall and up to 30 area units. (Combine two of these modules to make one suitable for launching a shuttle.) It includes flight control booths, terminals, guidance systems, exterior doorways, and all other devices necessary to send and receive spacecraft. (For example, in settings were such exist, the exterior doorways have atmosphere-retention forcefields. In other settings, the crew must evacuate the area before a ship may launch.) No ships are stored here. Multiple hangars can be serviced by a single launch bay, but military vessels often carry many or large launch areas, to get their fighters into space more quickly.

Livestock Bay (segmented): One large animals (up to half a ton each) can live comfortably in this 7.5-cubic-meter bay. This room includes perceived gravity and atmospheric controls.

Matter Teletransporter (specialized): Some game settings allow for instantaneous transportation of material. This unit can transport about half a metric ton of material that's less than one meter by one meter by 2.5 meters. Multiple units can be combined to create a teletransporter service station or a larger pad. One teletransporter (regardless of the number of modules it contains) requires a duty station to operate it. The difficulty to transport matter with the unit starts at Easy and increases due to distance, energy interference, complexity of the transported material, and so on. Gamemasters may impose restrictions on teletransportation distance (due to the limits of beam degradation, device components, or another reason).

Pod Bay (specialized): An escape pod, which can hold one person, takes up about six cubic meters of space with all of its dedicated terminals and rescue-courier launchers. The escape pod includes a distress beacon, which activates automatically and lasts for up to 25 years. It contains enough food and breathable atmosphere to keep the occupant alive for two months. Combine multiple instances of pods to create units suitable for larger groups. It has no easily accessible controls, but it is programmed to land on any available planet with a breathable atmosphere. If no such planet is within a two-month voyage, the escape pod maintains its position.

Vehicle Bay (specialized): This is a garage designed to house and secure a normal-sized land or water vehicle (no more than four meters tall and seven meters in length plus width). The crew should buy additional tools and fuels as desired. Included in the purchase price is a bay door for getting the vehicle into and out from the bay.

Halve this module for a smaller bay suitable for a motorcycle or small hover skiff.

Life-Support Equipment

The modules listed do not include supplies (just the hardware); the ship's owner will need to purchase those separately. The table below lists the module types, as well as the supplies.

Many modules suggest that they could contain food-processing units. The initial installation fee covers the cost of having these actually installed, if so desired, as well as putting the food into the area. If the ship includes food stores, then at least one room should have a food processor installed in it.

Atmosphere

To get the total cost for breathable atmosphere, add the number of people that the modules will support (regardless of whether people will be using those modules constantly, or even whether those modules are being used by the full complement of people or are just luxury upgrades); do not count the number of people that food supplies support. (This number is referred to as "person-areas" in the sample ships.) Then multiply that by 100 credits. Take the resulting figure, and multiply this by the number of month's worth of atmosphere needed. This is the total cost of including atmosphere in the ship. (The weight and storage of the air is already figured into the area and mass of the ship.)

Example: A very small transport might have a compact bridge (which supports one person) and six modules of bulk cargo space. The six modules, presumably full most of the time, don't require as much atmosphere as life-supporting areas. To

figure out how many persons' worth of atmosphere is needed, multiply the total number of bulk space units by 0.25 and round up. In the case of six modules, the total "person-areas" is 2 (6 x 0.25 = 1.5, round up).

Note that atmosphere and its cost does not represent a delivery person showing up to the ship with a big canister labeled "Air, One (1) Month" — breathable gases are part of it, but primarily what you're paying for is the upkeep and repair of scrubbers and filters that reduce the carbon dioxide build up within the ship's atmosphere.

For simplicity, the mass and storage area of the atmosphere is figured into the mass and area of the modules.

Food Processor Supplies

Equipment	Area Units	Mass (tons)	Energy Draw	Cost
Storage*	1	0.5	0.5	10
Food, snack (per month, per person)	—	0.1	0	60
Food, standard (per month, per person)	—	0.1	0	100
Food, luxury (per month, per person)	—	0.2	0	200

** Stores 5 months' worth of snack or standard food or 2.5 months' worth of luxury food.*

Food Supplies

The food storage room is a temperature-controlled area for keeping provisions. Automated selectors shunt the supplies to the appropriate food processors or the kitchen.

For food processing, multiply the number of people in the crew plus the maximum number of additional passengers (not the total number of people that the modules can hold) by the cost per month for the number of months' worth of food required. You'll need one storage unit for each five months of snack or standard food or 2.5 months of luxury food. The food itself adds to the mass of the storage unit, so the total tonnage of food should be less than or equal to the total tonnage of storage. (Divide the mass of the food supplies by 0.5 and round up to determine the number of storage units needed.) The storage unit doesn't require atmosphere.

Example: A pleasure yacht might have enough food supplies for 15 people for two months. If the ship owner decided to supply only luxury food, she would need six tons of supplies (0.2 tons x 2 months x 15 people). This would be stored in 12 area units of storage (6 tons of food/0.5 tons of food per unit = 12 units). The units themselves have a mass of six tons.

Surviving on Snack Food

Snack food may be cheaper, but it's not nearly as healthy as full meals. Anyone who tries to subsist on only snack foods must make an Easy *stamina* roll each day or be at -1 to all totals for the rest of the day. Characters who eat at least one full meal a day (more if they're participating in strenuous activities) get adequate nutrition. (Gamemasters may wish to impose long-term effects for diets that rely too heavily on snacks.)

Module Upgrades

Skill Bonus

Ships can offer a variety of computer programs that enhance their crewmembers' innate skills. Duty stations, workrooms, labs, and hangars/vehicle bays may have built-in equipment to help with maintenance, diagnostics, or whatever function the room is designed to serve. The better the equipment or data available, the bigger the bonus it gives to the user. These upgrades give their users a +1 pip bonus to relevant skill use with an installation cost of 200 credits and a energy unit draw of one per die or fraction thereof. (Remember that a bonus of three pips equals a bonus of +1D.)

Example: A +2 pip bonus costs 600 credits and has an energy unit draw of 1, while a +1D+1 bonus costs 1,200 credits and has an energy unit draw of 2.

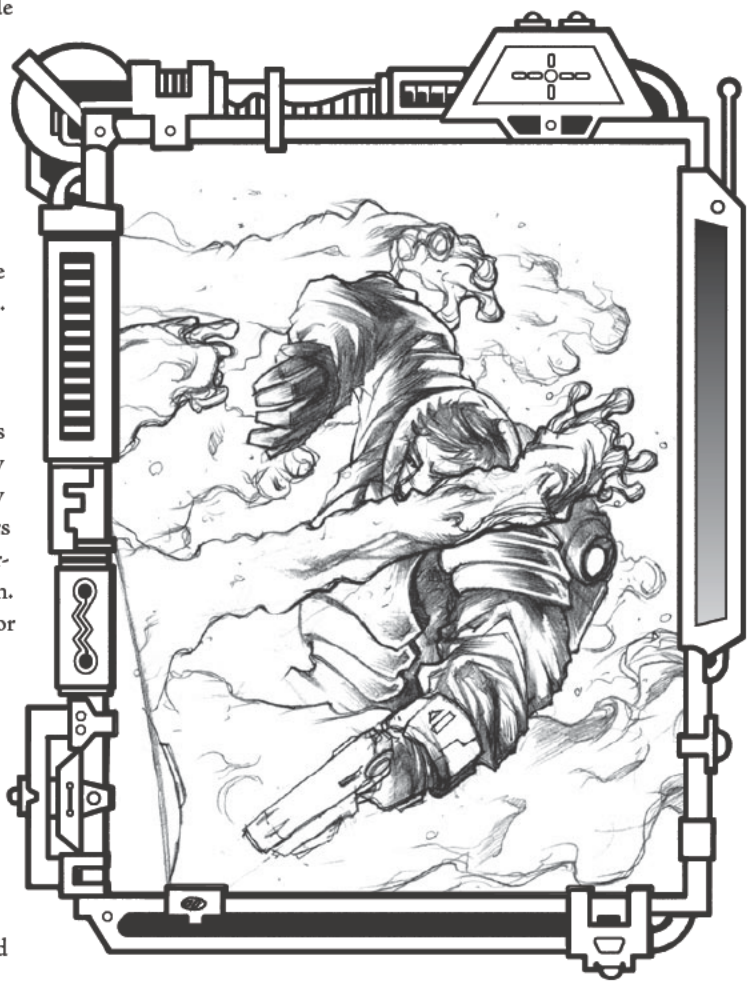

Cyber Interface

Those with neural-jacked crew can accommodate them by including a cyber interface. For a cost of 2,000 credits per interface, this allows a character with a neural jack to directly connect to the computer. The captain may restrict access to select users.

Autofunction Program

To create drone ships or automated outposts, an autofunction program can be added to the bridge. It's a complex artificial intelligence routine that allows the ship to handle itself in nearly any circumstance covered by its limited programming. For example, an autopilot program fly itself through most situations without a pilot. Though it can follow preprogrammed routines, it doesn't improvise very well. (Gamemasters may wish to add a modifier to the difficulty of situations that almost, but not quite, lie outside its programming.) On a failure with a Critical Failure, it could become confused. An autopilot program, for example, might move its ship into a tactically dangerous position.

The autofunction program begins with 3D in each of two skills. For example, an autopilot program would have *piloting* and *gunnery*. An autoresearch program would have *sensors* and *investigation*. Autofunction programs can be combined.

Of course, having good equipment and cutting-edge software is no substitute for good personnel. As a result, any program that can take the place of a crewperson can only do so well. Not only can the program never get a better result than the difficulty, do not use the Wild Die when determining the program's success. Character and Fate Points also may not be spent on the program's attempts.

Programming the autofunction program with one routine (such as a single flight pattern) requires a *computer interface/repair* roll against a difficulty of 5. Each additional subroutine (such as another flight plan, the control of one weapon, or the examination of another part of its area) increases the difficulty by 5.

Autofunction programs do require periodic maintenance to insure they continue to function properly.

Luxuriousness

To increase the luxuriousness of a module without increasing the space, add 10 to 25 credits (for minor alterations) to thousands of credits (for major ones). Nothing of any significant size can be added to the room. Instead, this upgrade fee represents various additions to modules. In living quarters, it could be an adjustable bed or chair, wall hangings or other art, soundproofing, individual climate control, soundsculpting, compact entertainment system, security, or viewscreen or port. In a leisure room, it might mean better or more complex exercise equipment or a better entertainment library. In a bridge or duty stations, this might represent food processors, voice or holographic interaction, security features (including anti-hacking programs), drive field expansion program, distress beacon, ship identification transponder, or cryogenic capabilities (for compact bridges and escape pods only). In cargo bays, it might account for automated loading systems, storage racks, climate control, security, the ability to detach cargo modules, and so on. In settings that use interstellar gates instead of interstellar drives, codes or an activation device for gaining access to the gates would be considered a "luxury" upgrade.

Module Upgrades

Upgrade	Energy Draw	Cost
Skill bonus (per pip)	1 per die or part	300
Cyber interface	0	2,000
Autofunction	15	8,000
Autofunction upgrade (+1D to one skill)	+3 per die	+2,000
Luxuriousness	0	variable

Example luxury upgrade costs:

Alternate interface: 3,000
Cryogenic equipment for 1-person modules: 125
Food processor (serves several people per hour): 25
Security: 1,000 or more
Ship identifier: 1,000

Other Features

The "Quirky Ships" chapter furnishes some addition options for personalizing the newly acquired vessel.

Weapon Modules

The core of adventure is conflict, and conflict among the stars means space combat. Nearly every ship the players' characters encounter in a science-fiction universe has ship-to-ship weapons on board. Indeed, most space-faring vessels of any significant tonnage at all have at least one weapon built in — and usually more.

One station can control all weapons, but a person may only fire one weapon per action. This is one reason that large ships often have multiple weapon stations.

Starship weapons fall into two categories: energy and projectiles. Energy weapons inflict damage through the application of some form of electromagnetic radiation, and projectile weapons launch solid objects.

The "Weapon Modules" chart provides a list of the most common varieties and their game characteristics, including their required area units, energy cost, mass, range, and damage. Use the chart as a starting point for developing new weapons specific to the desired universe.

The weapon descriptions don't specify exact appearance; this is left up to the designer. As one example, blaster and laser cannons might look like one large weapon or several smaller ones that fire at the same time (but that can't be fired individually).

For each weapon, a firing arc needs to be designated. Weapons can fire port side, starboard side, rear, or perpendicular (and away from the vessel). Of course, not all arcs are appropriate for all weapon placements. Swivel mounting the weapon in a turret to get additional arcs costs an extra 200 credits and one additional energy unit per additional fire arc.

Example: To fire in four directions costs 600 credits — three extra arcs — and another three energy units.

A ship's computer can aid with firing a weapon. See the "Modules Upgrade" section for details on improving the ship's computer.

Weapon Modules _

Type	Area	Mass	Energy	Cost	Ammo	Range[1] (space units)	Damage
Ammo bay (holds 1 unit)	1	2	0.4	100	—	—	—
Blaster cannon	1	2	8	5,000	—	5/10/17	3D
Blaster damage upgrade	+1	+1	+2	+2,000	—	—	+1D
Blaster range upgrade	0	0	+1	+1,000	—	+1/+5/+7	—
Laser cannon	1	2	3	5,000	—	3/12/25	2D
Laser damage upgrade	+1	+1	+2	+2,000	—	—	+1D
Laser range upgrade	0	0	+3	+3,000	—	+2/+4/+8	—
Machine cannon	1	1	1	2,500	30	4/8/12	7D
Replacement ammo[2]	—	—	—	500	600	—	—
Mine launcher	2	3	2	3,000	1	3/7/14	per mine
Replacement mine[2]	—	—	—	1,000	—	1/—/—	9D
Missile launcher	2	3	2	3,000	1	2/3/7	per missile
Launcher range upgrade	+1	+1	+1	+2,000	—	+1/+1/+1	—
Missile Warheads[2]							
Passive Homing	—	—	—	500	—	—	6D
Active Homing	—	—	—	800	—	—	5D
Cluster[3]	—	—	—	2,000	—	—	4D per warhead
Nuke[3]	—	—	—	6,000	—	—	12D/6D/3D
Noisemaker	—	—	—	1,000	—	—	[3]
Sensor decoy	—	—	—	2,000	—	—	[3]
Point-defense gun	1	2	2	4,000	—	1/2/3	5D
Torpedo launcher	2	3	2	5,000	1	1/3/7	9D
Replacement torpedo[2]	—	—	—	1,000	—	1/3/7	9D
Sensor probe launcher	2	3	2	10,000	1	2/16/14	—
Replacement probe[2]	—	—	—	5,000	—	2/16/14	[3]
Tractor beam projector	7	15	10	8,000	—	5/15/30	2D
Tractor beam upgrade	+7	+15	+10	+4,000	—	—	+1D

1. Except for point-defense guns and machine cannons, weapons cannot lock on anything less than one space unit from their muzzle tip. The Short range for a point-defense gun or machine cannon begins at zero. To get atmosphere ranges, multiply by 100.

2. The size and mass of this unit is already figured into the launcher or ammo bay.

3. See text for details

Weapon Extras

> **Firing arc** (forward, rear, port side, starboard side, or perpendicular): 1 free arc
> **Swivel mounted:** +200 and +1 energy unit per additional arc
> **Fire-linking:** +100 per weapon linked to fire as one (see text for restrictions)
> **Firing control bonus:** Add a *gunnery* skill bonus to the station controlling the weapon; see "Module Upgrades" for details.

Most weapons can't lock on anything less than one space unit from them, with the exception of point-defense guns, which are designed for this purpose. (In some settings, gamemasters may allow weapons to target ships at less than one space unit, possibly at a greater difficulty due to the increased challenge of following something moving quickly over a short distance.)

Configurations

Cannons, point-defense guns, and tractor beam projectors may fire from one or more barrels closely grouped together. Unless individual guns are fire linked, the gunner may not fire individual barrels of a multi-barrel gun.

Each launcher has only one tube from which its projectile is expelled.

Atmospheric Ranges

For those ships that can fly near planetary surfaces, multiple each range value by 100 kilometers to get the atmospheric range for each weapon. Any range limitations in space apply in the atmosphere as well.

Ammo Bay

Obviously not a weapon, this small compartment is needed to store spare missiles, mines, torpedoes, or probes. It holds

File Name: Revised Ship Design
Notes: Along with the rest of my ship.

one of these, and it must be placed near its associated launcher. Auto-loaders within feed the ammunition to the proper weapon in one round. The size and mass of each ordinance are included in the size and mass of the ammo bay.

Blaster Cannons

A blaster cannon is an energy weapon that fires a pulse of coherent radiation toward the target. This pulse maintains cohesion over very long distances, and so as a result, blaster cannons are favored long-range weapons. The energy required to hold the pulse together, however, results in the weapon doing less damage than other similarly priced energy weapons once it actually strikes the target.

Laser Cannons

Laser cannons are energy weapons that fire a beam of charged particles toward a target. Any beam weapon falls under this category, whether or not it actually is a true "laser" as it's technically defined. Laser weapons are not effective at extreme distances, but they make up for their shorter ranger by packing more of a punch than blaster cannons. More of the energy directly carries through to the target upon a successful strike.

Machine Cannon

Machine cannons fire solid projectiles. They're cheap for the damage, but they are limited to about 20 rounds of constant use before running out of ammunition. They are capable of burst or automatic fire, but they can't fire single shot.

The "Ammo" column indicates how much ammunition can be stored in the ammo bay. The ammunition must be purchased separately; it's not included in the weapon price.

Mines

Mines are missile warheads with command, impact, and proximity detonators set adrift in space to damage passing ships. The detonators are activated when the pod is launched. Any ship or large, metal body within one space unit of the mine attracts and detonate it. (Anything, regardless of the composition, running into it also detonates it.) They have battery-operated jets that hold them in position for up to a week. After that, the relatively tiny mines drift where gravity pulls them.

Mines are dangerous weapons. They're tiny, they emit very little power, and they have radar-reflective paint and surfaces. This is a combination which makes them extremely difficult to detect. Their *stealth* rating is 24. The difficulty drops to 12 if the mine has locked on.

All this makes mines bad for enemy ships, but the real danger stems from the sheer number of mines deployed in previous conflicts and the fact that they don't always disappear when they float away. Some burn up in planetary atmospheres while others are hit by asteroids, but most of them simply float around until they encounter an unsuspecting ship and explode.

The detonators can remain active for years. Fighting ships have deployed mines of one sort or another in every protracted conflict since beings first traveled to the stars, and any *piloting* misfortune at the end of an interstellar trip could easily indicate an unexpected encounter with a forgotten mine. For this reason if for no other, smart skippers emerge from a jump with their shields up.

Missiles

A missile launcher is a weapons rack that holds one independently targeted, self-propelled rocket. Additional missiles are stored in nearby ammo bays, which automatically load the next missile into the launcher. The range and damage of the weapon varies, depending upon the warhead carried by the individual missile.

A missile launcher does not come with a missile; this must be added separately. Additional missiles may be purchased, one for each ammo bay connected to the missile launcher.

For ships that drop bombs, the missile launcher firing arc is "down." The missiles are either passive homing or nuke.

Passive Homing: This missile homes in on a target using the firing ship's sensors for targeting. If the firing ship's sensors are deactivated or destroyed, or the communications link between the missile and the firing ship is severed in some way, the missile self-destructs.

Active Homing: This missile has its own sensor suite on board, and therefore it doesn't rely on a communications relay with the firing ship. It uses its own sensors to home in on its target, but those sensors are rudimentary, and can be fooled by noisemakers.

Cluster: This missile carries three independent warheads. Within one space unit of the target, the missile splits into three separate payloads, each of which is capable of delivering a 4D strike against the target. Point-defense systems must destroy each incoming warhead to avoid damage. Cluster missiles are considered active homing for the purposes of noisemakers.

Nuke: This missile is a passive-homing rocket armed with a nuclear warhead. It can be targeted at either an individual vessel or an area in space. (In the event of a miss, the gamemaster determines where the detonation actually occurs, if any — usually no more that 1D space units away from the target point.) Upon detonation, the nuke does its full damage to all targets within two space units, half damage to all targets more than two but

Variable Settings _

Some campaigns permit variable payloads on torpedoes or variable settings on their energy weapons. Generally adding no additional cost to the weapon, some gamemasters may increase the price by 50% or more to reflect that it's "cutting edge" technology.

Switching between settings requires a simple (no-roll or Wild Die–only) action in most circumstances. Fine tuning a weapon calls for a *gunnery repair* roll and several rounds or minutes of fiddling with the wiring, programming, relays, or other components. (The difficulty depends on how far from normal specifications the adjustment is, with a minimum difficulty of Easy.)

less than three space units away, and quarter damage to targets three to four units away. Targets five or more units distant from the explosion take no damage. The radiation also scrambles all communications, neutralizes all battery power sources, deadens all control systems, and jams all sensors of all targets within three space units of detonation. The effect lasts for 2D hours. Most places ban these warheads due to their devastating and long-lasting effects.

Noisemaker: This missile can be directed to travel to anywhere up to 10 space units distant from the launching vessel. It matches the speed of the launching vessel (at the time of launch; no speed corrections are possible after launch), and it releases an electronic scream of white noise for up to 10 rounds. (It can be turned off by the launching ship.) The noisemaker confuses the sensors of other missiles, increasing the difficulty of attack rolls by +6D (+18) for active-homing missiles. Noisemakers can also make enemy sensor operations difficult (+1D or +3 difficulty modifier). This includes attempts to locate or target the launching vessel with energy weapons or passive-homing missiles.

Sensor Decoy: Sensor decoys send out signals to fool other ships' sensors. They are ejected with a pre-programmed course and have a space Move of 5. Their power plants last for about an hour before burning out. The base *sensors* difficulty of determining which is the real ship and which is the decoy is Moderate. They have a Toughness of 4D and beating it by 12 points of damage results in its destruction.

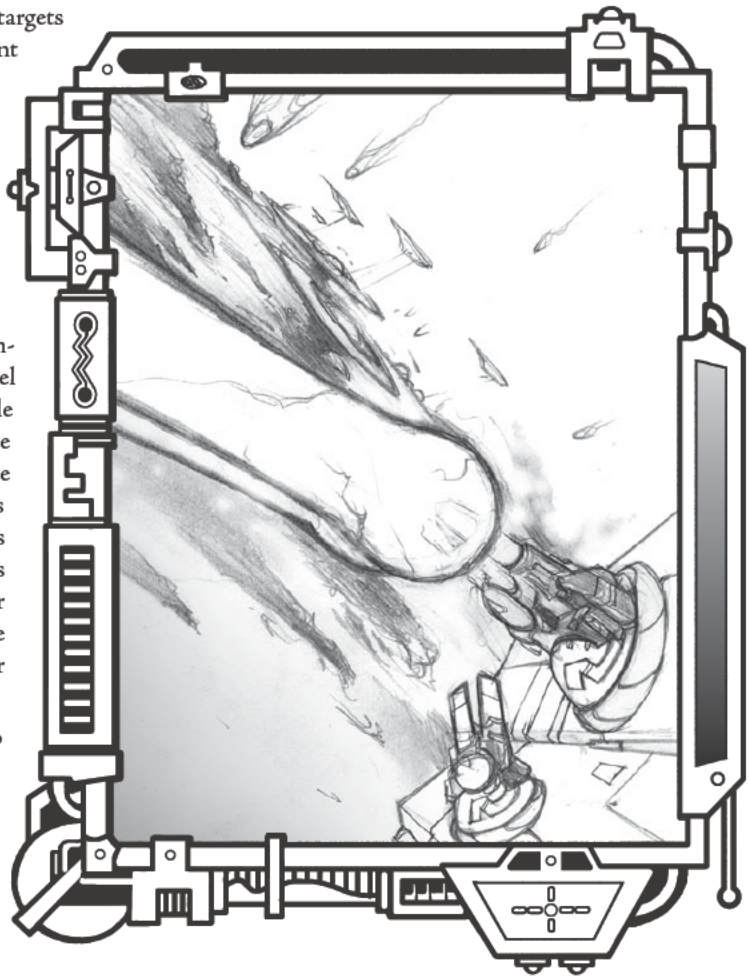

Point-Defense Guns

Point-defensive systems are specialized, rapid-fire energy weapons designed specifically to target small objects close to the vessel. They are most commonly used to target incoming missile weapons. The weapons controller does this by rolling *gunnery* as a parry attempt against missile and torpedo attacks. One roll works for all attacks that happen after the gunner makes the "parry" attempt. Instead of using the combat difficulty number to hit, the missile firer makes the attempt against the *gunnery* roll. Use the same rules as for a character's parry, including full and partial parry actions.

Projectiles that miss the gunnery difficulty explode at two space units from the defending ship. If the projectiles get through anyway, the damage is figured as normal against the vessel's shields, armor, and hull.

Gunners can use point-defense guns against fighters attacking the vessel, though this counts as a separate action from destroying missiles. The "Weapon Modules" chart lists the ranges for a point-defense gun used in this way.

Torpedoes

A torpedo launcher fires an active-homing warhead that's larger than the average missile. It features a sophisticated sensor package that can't be decoyed by noisemaker missiles. The warhead is usually some form of massive energy-release weapon, such as a mass-to-energy converter or an antimatter charge. Its large payload results in a shorter effective range than other missile weapons.

The launcher comes with one torpedo. Additional torpedoes may be purchased, one for each ammo bay connected to the launcher.

Sensor Probes

Sensor probes extend a ship's scanning capabilities and reduce the risk to vessels in unknown space. Their main attraction is a compact, battery-powered, forward-facing energy sensor with a transmitter relay. The ship receives the data transmitted from the pod and the software interprets it as if the ship had collected it with its own sensors.

The pod is self-propelled, like a missile. It only moves at two space units per round, but its drive has enough power to run for five minutes. The probe transmits data for five days.

It's intended for launch from a ship moving no faster than *cautious* speed. If the ship is moving faster, then the pod's launch velocity increases accordingly. Doing this confuses the pod's scanner, distorting its data and resulting in a steady supply of misinformation.

The transmitter has a range of 200 space units. The launching ship can control the pod, telling it where to go and when to stop, with a *sensors* roll. The difficulty starts at Easy for a probe

up to 25 space units away and increases by +1 for every additional 25 space units that the probe travels from the ship.

Probe pods have scale of 1 and a Toughness of 4D. Beating the Toughness by 12 or more will destroy one, but they're hard to spot (*stealth* 20). They're expensive, given their disposable nature, but scouts love them because losing a pod is far cheaper than losing the whole ship.

Tractor Beam

A tractor beam allows one ship to pull another one closer to it. (A small ship can pull itself closer to a large one, while a large one can pull a smaller one in.) The base unit offers a tractor beam "damage" of 2D. For each additional +1D to the beam, add 4,000 credits, another seven area units, 15 tons, and 10 energy units.

For more information on using tractor beams, see page 23 of this book.

Weapons Extras

In addition to a swivel mount (see the beginning of the "Weapons" section for details), ordinance can have improved firing control or be fire-linked.

For improved firing control, the weapon needs a bridge or duty station that has a *gunnery* skill bonus module upgrade. (See the "Life-Supporting Modules" section earlier in this chapter for details.)

Several weapons can be linked to fire at the same target simultaneously at a cost of 100 credits for each additional weapon. (Gamemasters may wish to limit the number of fire-linked weapons to four.) The weapons must be identical in type, range, and damage. Fire-linking provides a die total bonus to the damage of one weapon equal to 1 for every 2D in the total of amount of damage for the set of fire-linked weapons. (Round down fractions.)

Example: An Erda-class strike fighter has four fire-linked laser cannons. Each cannon deals 4D damage. The total damage for the set is 16, making the bonus +8 (16/2). When firing together at the same target, the weapons do 4D+8 damage.

The weapons may also fire individually, but they don't get the bonus.

Weapons and Scale

Instead of a special mechanic to allow a small ship to take on a larger one, designers can increase the power of the weapons to allow the ship to do more damage against a larger craft. A 1D increase in damage can offset about a three-point scale modifier to the target's damage resistance total.

Likewise, larger vessels can better attack smaller vessels by improving the targeting ability of its guns. A 1D bonus to gunnery can overcome about a three-point scale modifier to the combat difficulty.

In-System Drive

System	Space Move	Area Units	Mass (tons)	Energy Draw	Cost
Basic drive	0	2	2	0	500
Additional Move	+1	+1	+1	+3	+1,000

Thrusters

System	Maneuver.	Area Units	Mass (tons)	Energy Draw	Cost
Improved thrusters (per pip)	+1 pip	—	—	+2	+600

Drive Modules

Drives, drawing energy from the power plant, move the ship through space They can be anti-gravity propulsion, hyperspace generators, or however the gamemaster wants to describe the technology and physics behind it.

Ships have in-system (or sublight) drives and, sometimes, interstellar.

In-System Drive

In-system drives propel a vessel through space at sublight speeds. Even vessels capable of interstellar flight need an in-system drive to take over propulsion of the ship when it's maneuvering within the confines of a star system.

The smallest in-system drive covers three area units, has a mass of three metric tons, and has a cost of 2,500 credits. It gives a space Move of zero. For each additional Move increase of 1, the cost goes up by 1,000 credits and the *cruising* speed energy requirement goes up by three.

Designers who want to push their craft to extreme speeds frequently should be certain that their power plants can handle it: Moving at *all-out* speed takes 2 times the normal amount. (See the "Spaceship Movement" section on page 18 of chapter 1 for more details.)

Maneuvering Thrusters

Though the bulk of the in-system drive is housed in a single section of the ship, a series of maneuvering jets and retros along the ship allow it to turn in frictionless space. The basic system included with ships provides the 0D in Maneuverability. Better or additional thrusters increase the Maneuverability. Their size is figured into the hull and as part of the rest of the ship. Each improvement to the thrusters adds one pip to the Maneuverability rating, with an energy draw of two units. (Remember that there are three pips in one die.) The maximum Maneuverability of any ship is 5D (unless the gamemaster specifies otherwise).

Interstellar Drive

In game settings featuring many far-flung star systems, the characters will need a way to travel from one system to another. Usually, this is accomplished by equipping vessels with interstellar drives. This drive allows space-faring vessels to make the

Accessing: D6 Space Ships File 2
Notes: Add "fix thrusters" to to-do list.

Driveless Interstellar Travel _

A campaign doesn't have to have vessels with interstellar drives to allow interstellar travel. The gamemaster may choose to instead link the solar systems of her campaign setting with a series of wormholes or jump gates — areas of space that, when passed through, will catapult any vessel through a fixed route to an adjoining area of space many light-years away. In this way, ships without the ability to travel faster than light under their own power can still journey from system to system.

The jump gates might exist because interstellar drive technology is too massive to fit onto a vessel, or they may be leftover relics of a long-dead alien civilization — whatever works best for the campaign.

Gamemasters may create the jump gates using the free-form method. To best simulate the gate using the standard system, it requires a bridge (and possibly living quarters for the crew, if the gate isn't automated), a small in-system drive with minimal thrusters (for the occasional location corrections), an interstellar drive, and enough additional bulk cargo units to make the appropriately sized ring. The total number of areas required equals 4 times the square of half of the width of the largest vessel going through the gate. This gives the ship plenty of room to move through the opening.

Use the gate's interstellar drive as if it were the ship's. If two gates are required, the gamemaster should ignore navigation mishap results. If only one gate is required, then the gamemaster may decide that a navigation failure with a Critical Failure indicates that something went wrong with the gate.

miraculous leaps of distance that can shape the universe, crossing the space in far less time than it would take using conventional in-system drive systems. Regardless of the in-game explanation for interstellar travel, most interstellar drives commonly fall into two categories: the jump drive and the warp drive.

A jump drive is one where the vessel crosses the distance between its origin and its destination by "jumping" from point A to point B without ever crossing the intervening space. The vessel winks out of existence, and re-enters the universe at its destination, having "jumped" the gap in between. During the crossing, the vessel travels through a parallel dimension where the distance is greatly reduced (often called hyperspace, warpspace, subspace, otherspace, etc.). In some settings, people on board the vessel may be aware of the passage of time within the jump, or it may be instantaneous from their point of view. Other common names for jump drives are quantum drives, wormhole drives, and similar terms.

A warp drive is one where the vessel somehow warps the physical rules of the universe, so that speeds in excess of the speed of light are possible, and relativistic reality (time dilation, greater speed/greater mass, etc) is ignored. The vessel travels physically through the intervening space between point A and point B, simply by going exceptionally fast. Other common names for the warp drive are hyperdrives, lightspeed drives, faster-than-light (FTL) drives, and the like.

Some gamemasters may disallow these drives, preferring instead to focus adventures on a single system. For everyone else, here are guidelines for adding them to the ship.

The interstellar drive must be located next to the in-system drive, because the interstellar drive is actually an extension of that system, drawing on the same power source but using it in a vastly different way (as determined by the gamemaster). Interstellar drives are ranked by ratings. Interstellar drives with low rating numbers increase the amount of time it takes to reach a destination, while high ones decrease it. Most civilian ships have a rating of 0.5 or lower, and most military vessels have a rating of 1 or better.

The lowest rating a ship with an interstellar drive can have is 0.1. It costs 5,000 credits. It takes up two area units, with a mass of five tons and an energy requirement of 10. For each additional 0.1 in rating, add one area unit, three tons of mass, 10 energy units, and 5,000 credits to the price.

Example: A cargo hauler has a drive that provides a 0.5 rating. The interstellar drive takes up six area units (two for the basic plus four for the additions to the rating) and has a mass of 17 tons (five for the basic plus 12 for the additions). It requires 50 energy units (10 for the basic plus 40 for the additions) and costs 25,000 credits (5,000 for the basic, plus 20,000 for the additions). The 50 energy unit cost would be required for the length of the interstellar travel — hopefully, the ship designer allowed for this, otherwise the crew may end up having to spend time in cold sleep because they can't pay the cost of life support!

Example: A frigate has a drive that provides a 1.0 rating. The interstellar drive takes up 11 area units (two for the basic plus nine for the additions to the rating) and has a mass of 32 tons (five for the basic plus 27 for the additions). It requires 100 energy units (10 for the basic, plus 90 for the addition) and costs 50,000 credits (5,000 for the basic plus 45,000 for the additions). You can begin to see why only military vessels have such high ratings — only navies have the budgets for such expensive engines!

See page 13 of this book for tips on using interstellar drives at less than their maximum rating (for those game settings that offer this option).

Backup Interstellar Drive

Some captains, especially those on deep-space expeditions, like to have a spare interstellar drive on hand. Usually this is small drive with a low interstellar Move. The captain needs to pay for the second drive and include the area and mass in the ship's design, but they don't worry about the energy unit requirement (as long as

Interstellar Drives _

System	Drive Rating	Area Units	Mass (tons)	Energy Draw	Cost
Basic drive	0	2	6	0	1,000
Increased rating	+0.1	+1	+3	+10	+5,000

File Name: Revised Ship Design
Notes: Get a new gate key.

it's less than the main drive), because the backup cannot operate at the same time as the primary drive. (It thus shunts energy from the presumably useless main drive.)

Stationary Space Vessels

You can design a stationary or permanently orbiting vessel by giving it no drives. Some gamemasters may require that the ship have a minimal in-system drive and thrusters for those rare times that corrections are needed to maintain the vessel's location.

Power Plant Modules

The power plants available to ships are as widely varied as the ships themselves. They generate power from chemicals, fission, fusion, solar cells, antimatter, or some other source entirely. The gamemasters may determine the specifics for their own individual game setting, if they so desire.

The smallest power plant covers two area units, has a mass of two metric tons, and has a cost of 2,500 credits. It provides 25 energy units to the ship. Adding more power increases the size by one additional area unit and two additional tons for each extra 15 energy units, with a cost increase of 2,000 for each upgrade.

The power generated from the plant is used to run all of the systems on board the vessel. Ship designers must make sure that their power generation meets their needs as if every system is operating simultaneously. Obviously, systems like the interstellar drive will not be running constantly, and only need to draw energy when in use, but ship designers need to make sure that they don't find themselves with an energy shortage, having to juggle systems on and off.

Main power plants can last for about one year before needing to be refueled. (Ships that don't use much of the energy output can make the plants last longer.) Most give a warning — such as an audible signal, a flashing light, or a computer-generated message — about one month before they quit.

Battery Backup

Battery plants are simply storage batteries that hold energy. They are small and popular in short-run fighters and shuttles. They can charge off of larger plants at a rate of one minute per energy unit generated. They can run for one day per energy unit generated before needing to be recharged. Unused battery plants keep their charge indefinitely. Burned-out batteries, generally because they were overloaded in a massive power draw, are replaced rather than repaired. Multiple units purchased may be considered part of a single battery or a linked series of small batteries.

Power Plant Modules

Plant	Area Units	Mass (tons)	Energy Output	Cost
Main plant	3	3	25	4,500
Additional energy	+1	+2	+15	+2,000
Battery backup	1	1	10	700
Burst capacitor	1	1	20	400

A Bigger Power Plant

You might think that you can squeak by with a power plant that generates the minimum amount required by the ship. But when you're up against a pirate corsair twice your size, you'll be glad you got the additional upgrade, so you can:

> boost shields
> increase the movement rate
> expand the drive field
> increase power to the weapons (if allowed by the game setting)

Of course, a bigger plant also makes it easier to upgrade the ship in the future.

Burst Capacitors

Similar in size and capacity to battery backups, burst capacitors offer a brief "burst" of power to one system (generally the drives). They are much cheaper than batteries, but once used, they need to be replaced. They last for a number of hours equal to their energy output. Designate whether multiple burst capacitors are part of one unit or a series of smaller units.

Shields and the Power Plant

Shields are one of the last components added to the ship. Designers who want to have them in their vessels need to include enough energy to power them. Shields have a draw of one energy unit per pip of protection.

For more details on adding shields, see the "Shields" section later in this chapter.

Exterior Accessories

Hull

The next step of starship design is to encase the modules that make up the ship's interior with a hull that holds the whole thing together and adds components for thrusters, weapon conduits (to account for scale), compensators, and the like. Adding an exterior casing does not increase the vehicle's size, but it does add to the vessel's mass.

The mass of the hull equals half the mass of all the other modules included in the ship so far. (Round up the module mass total before determining mass of hull. Round up the mass of the hull.) To figure out the cost of the hull, multiply its mass by 500 credits.

Then, use the bulkhead's mass (**not** the total mass of the entire vessel) to determine its base Toughness by reading the figure on the accompanying chart. Round the number of tons down when figuring hull Toughness.

Example: A ship with a hull mass of 105 tons has a hull Toughness of 2D+2, not 3D.

Body Points

Some gamemasters may prefer to use Body Points rather than the vehicle Wounds system. To determine the number of Body Points that the ship has, multiply the number in front of the "D" in the ship's Toughness by 5, add the pips, and add 20. Use scale, armor, and shields as normal.

Atmospheric Streamlining

Some vessels can operate within the atmosphere of a planet. Gamemasters may decide that ships over a certain number of modules may never enter the atmosphere, or they may ignore that restriction entirely, as dictated by the details of the individual game setting.

A vessel streamlined for atmospheric capability is more expensive than a nonatmospheric vessel —it increases the hull's cost by 20% (that is, it costs 100 times the hull's mass). The streamlining smooths out the rough edges and adds stubby wings; it also increases the hull's mass by 25% (round up).

A vessel with atmospheric capability must have at least 2 times the base hull Toughness (armor plus shields) to protect against the heat generated by re-entry.

Example: The design of the ship with a hull mass of 105 tons decides to streamline the vehicle. This adds 27 tons to the mass (105 x 0.25 = 26.25, rounding up to 27) and 10,500 credits to the total cost (105 x 100).

Atmospheric Movement Rate

A ship's atmospheric speed generally relates to its capabilities in space. To determine the base atmospheric movement rate, multiply the ship's space Move by 50. Then use the table to translate that value to kilometers per hour. Find the closest atmosphere rate to get the corresponding cruising speed in kilometers per hour. (Gamemasters may adjust this value as they feel best represents the setting, including increasing the speed for thin atmospheres and decreasing it for thick ones.)

Atmosphere Movement Rate

Atmosphere Rate	Kilometers per Hour
50	130
100	260
150	430
200	560
250	750
300	850
350	1,000
400	1,150
450	1,300
500	1,450
550	1,600
600	1,750
650	1,850
700	2,000
750	2,150
800	2,300
850	2.450
900	2,600
950	2,750
1,000	2,900

For every additional 50 in atmosphere Move, add 150 kilometers per hour.

Note: In some settings, ships traveling over 1,150 kilometers per hour (approximately the speed of sound at sea level in an Earth-like atmosphere) could have detrimental effects on the planet's environment.

Multiply the kilometers per hour value by 1.4 to get the approximate number of meters per round.

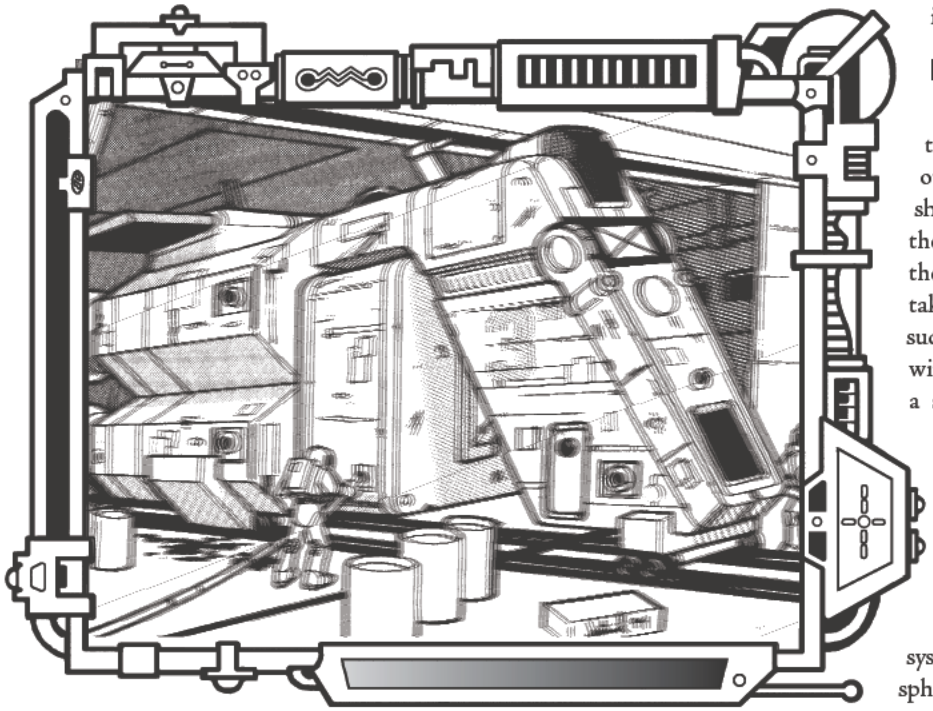

Landing Gear

Characters who wish to have their vessels touch down on planets ought to include landing gear in their ships. Stored along the underside of the vehicle, these are activated when the landing sequence is engaged. They take a form appropriate for the setting, such as sturdy, folding legs (possibly with solid wheels) that drop out, or a series of heavy-duty anti-gravity compensators.

Since bigger ships need more landing gear, mass of the gear is based on the hull's mass. Though the landing gear requires power to deploy it, the need is minimal and comes from power plant reserves or systems that aren't used within the atmosphere (such as interstellar drives).

File Name: Revised Ship Design
Notes: Reminder: This ship can't land.

Exterior Accessories _

Hull Mass (metric tons)	Hull Toughness	Cost per Armor Pip
Less than 10	0	500
10	1D	1,000
15	1D+1	1,500
25	1D+2	2,500
40	2D	4,000
60	2D+1	6,000
100	2D+2	10,000
150	3D	15,000
250	3D+1	25,000
400	3D+2	40,000
600	4D	60,000
1,000	4D+1	100,000
1,500	4D+2	150,000
2,500	5D	250,000
4,000	5D+1	400,000
6,000	5D+2	600,000
10,000	6D	1 million
15,000	6D+1	1.5 million
25,000	6D+2	2.5 million
40,000	7D	4 million
100,000	7D+1	10 million
150,000	7D+2	15 million
250,000	8D	25 million

For values over 250,000: For every additional 250,000 tons, add +1 pip to the Toughness. One pip of armor costs 100 times the number of tons.

> **Hull area:** Not applicable
> **Hull mass:** 0.6 x mass of modules
> **Hull cost:** 500 x hull mass
> **Atmospheric streamlining cost:** 100 x hull mass
> **Atmospheric streamlining mass:** 0.25 x hull mass
> **Landing gear cost:** 75 x hull mass
> **Landing gear area:** Not applicable
> **Landing gear mass:** 0.2 x hull mass
> Landing gear energy requirement: See text

Armor

> **Armor cost:** See list
> **Armor area:** Not applicable
> **Armor mass:** Cost/1,000
> **Armor energy requirements:** None
> **Maximum armor:** Hull Toughness

Shields

> **Shields cost:** 1.5 x armor cost per pip
> **Shields area:** Shields cost/20,000
> **Shields mass:** Shields cost/10,000
> **Shields energy requirement:** 1 energy unit per pip
> **Maximum shields:** None

Rounding

> Round all fractions up.

Stealth Options

Aside from sensor decoys (listed under weapons), ships can use other means to hide themselves from other vessels.

Stealth paint increases the difficulty for other ships to detect it by +5. It costs a number of credits equal to the hull's mass to put it on. Damage to the ship's exterior, however, scratches the paint, lowering its effectiveness by one point for each point over the combat difficulty. Damaged paint must be replaced.

Jamming programs send out electrical signals that prevent sensors from getting information about the vessel. For every +1 to the *sensor* difficulty, the cost is 1,000 credits. A jamming program requires a duty station.

Gamemasters can also use Special Abilities (such as Blur and Invisibility) to simulate other stealth or cloaking features. See the "Quirky Ships" chapter for details.

Armor

Ship designers who know that a vessel will be experiencing a great deal of space combat often bolster the toughness of the ship's hull by adding armor to it: riveting plates on the outside, using better materials for the exterior, reinforcing bulkheads, or improving the supports. Use the "Hulls" chart to determine how much each additional pip of armor costs. The maximum amount of armor a ship can have equals the base hull Toughness. (Remember that there are three pips in one die.) Armor draws no energy but does add a number of tons equal to its cost divided by 1,000.

Example: A 1,000-ton ship has a base Toughness of 4D+1. Additional armor can be purchased, up to a maximum of 4D+1, but that would cost 1.3 million credits (4D+1 is 13 pips, and each pip costs 100,000 credits). Armor worth 4D+1 would add 1,300 tons (1.3 million divided by 1,000).

Hull armor (which includes the structure of the ship) needs to be repaired — or, more likely, replaced — when it's damaged.

Shields

Space vessel shields work very much like hull armor (adding to the damage resistance of the vessel), but they have an additional advantage — unless the whole system is blown away, they will usually only need to be fitted with a few new components. Enough damage can overload them, however; see the "Ship Travel and Combat" chapter for details.

Stealth Options _

Stealth Paint
> Cost: Hull's mass
> Energy requirements: None
> Bonus: +5 to opponent's *sensors* difficulty

Jamming Program
> Cost: 1,000 per +1 to opponent's sensors difficulty
> Requires duty station

Other Options
> See page 50 of the "Quirky Ships" chapter

Energy shields are "bottles" that surround a ship. The shield projectors work in conjunction to form this bubble.

Shields cover the four quarters of a vessel (forward, aft, port, and starboard), and the ratings can be divided among those four quarters as the ship's captain sees fit. (See the section on shield deployment in the "Ship Travel and Combat" chapter.)

The shield generator module costs 1.5 times the cost for adding armor, per pip, but there is no maximum. (A three-pip increase equals one die.) They have an energy requirement of one unit per pip. Divide the cost by 10,000 to get the number of tons and by 20,000 (round up) to get the number of area units. These areas represent the individual shield projectors, which are spread over hull of the ship.

Shield-generator modules do not add to the ship tonnage when determining the hull Toughness.

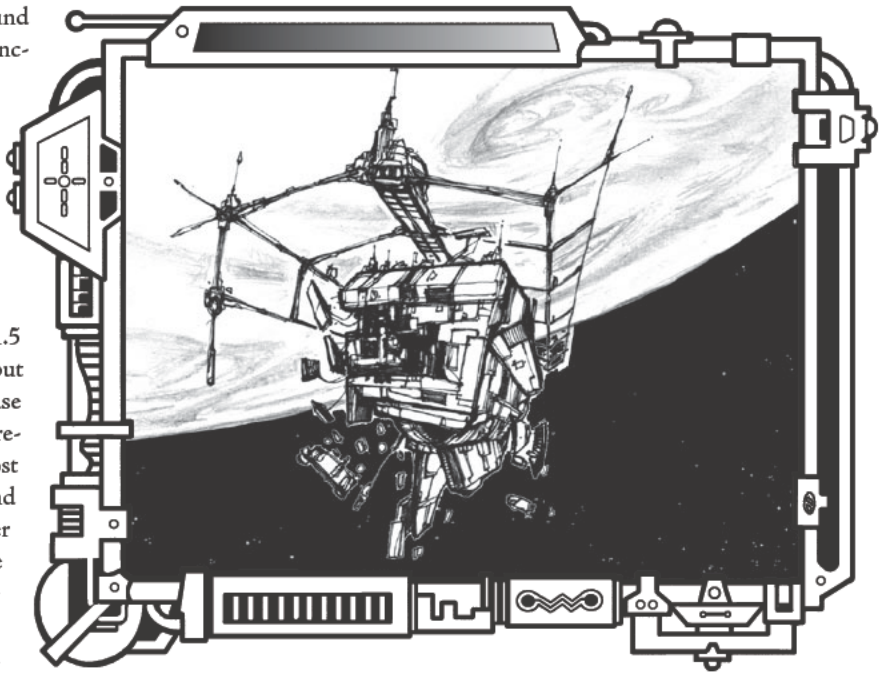

Example: The 1,000-ton vessel could include a shield generator. If the generator provided the same 4D+1 in coverage as the armor, it would cost 1.95 million credits (1.5 times the cost of the armor), with an energy requirement of 13 units. The generator would mass 195 tons (1.95 million credits divided by 10,000) and would take up 98 areas (1.95 million credits divided by 20,000, rounding up), spread over the entire ship.

Shape and Size

There are an almost infinite number of ways the modules may be put together to form a vessels. Here are a few examples and how to determine the approximate length of each.

Cylindrical: The ship is a few meters wide, a few meters deep, and very long. (On graph paper, the area units would be side by side.) Add together the number of area units of all the modules, and divide by 2 to get the length.

Ellipsoid: Ships designed this way have a squashed-egg appearance, a few meters deep and twice as long as they are wide. To get the length, add together the number of area units of all modules and divide by 3.

Spheroid: The area units of the modules are evenly divided throughout two or more layers. Add together the number of area units of all the modules and divide by 6 to figure out the radius. Note that spheroid vessels are not normally capable of atmospheric flight.

Wedge-Shaped: The ship is a few meters deep and wider at the tail than at the nose. To find the length, add together the number of area units of all the modules and divide by 4.

For other shapes, or vessels that use a combination of shapes (for example, saucer shapes connected to cylindrical sections), either draw out the section or simply use the ellipsoid formula, which is close enough to what the average result would turn out to be.

Determining the Scale

To figure out the scale of the ship, take the total tonnage and compare it to the accompanying chart, following the instructions given with it.

If you're using freeform design and just listing length, multiply the length value by 10, 100, or 1,000, depending on the size of the ship.

Example: The *Zeus Machina* (described in the sample ships chapter) has a length of 1,500 meters. Since this is supposed to be a really big ship, multiply by 1,000 to get the approximate tonnage — 1,500,000 tons. That has a scale value of 36.

Note that the chart works best for ships, though it can be used as a starting point for determining the scale of other celestial objects. However, if the designer or the gamemaster think that something about the ship (such as a compact design or poorer or better quality construction materials) warrant a different scale value, feel free to make adjustments.

Determining the Price Difficulty

After you have found the total cost of all components of the vessel, divide the number by 10,000 (round up) and add 20 to determine the price difficulty.

To purchase a ship, characters may pool their funds. The group designates a primary purchaser, who will make the *Funds* roll. This character must have at least 3D in *Funds*.

Characters supporting the purchaser decide how much of their Funds they wish to contribute, in 1D increments. They then roll this amount, modify the total by the Poverty Disadvantage (if applicable), and divide that total by 5, rounding up.

Those with Wealth may contribute ranks of their Advantage at a rate of +1 for each rank of Wealth provided.

The bonus adds to the purchaser's *Funds* total, not to the die code. It may be used for the ship's purchase only.

File Name: Revised Ship Design
Notes: Make bots to scrape hull.

Ship Scale

For Ships Massing 10 Tons or Less

Total Mass of Ship	Scale
1	5
2	7
3–4	8
5–6	9
7–10	10

For Ships Massing More than 10 Tons

First 2 Digits of Tonnage	Base Value
10*–15	6
16–25	7
26–40	8
41–60	9
61–99	10

Number of Digits after First 2 Numbers	Value Modifier
0	+5
1	+10
2	+15
3	+20
4	+25
5	+30
6	+35
7	+40
8	+45
9	+50
10	+55
11	+60
12	+65
13	+70
14	+75
15	+80

** If there are no digits after 10 or they all equal zero, then the base value is 5 (not 6).*

Due to the high price of buying a ship, every character who contributes to buying a ship loses access to those dice of *Funds* for one week per die or rank of Wealth added.

Example: Shar and her pals want to get their characters a shuttlecraft, which has a price difficulty of 27. Shar's character has 4D in *Funds,* which, if she's lucky, will net her a 25. More likely, she'll only get 12 to 16 on the roll. She cajoles the others in her group to help out. Jim offers 2D of his character's 3D in *Funds* and one rank of Wealth. He rolls 9, which translates to a bonus of 2. His character's rank of Wealth means a bonus of +1. Katrina puts in her character's entire 4D in *Funds,* rolling 17, for a bonus of +4. That gives Shar a roll-total bonus of 7, which hopefully will be enough.

If Shar can buy the ship, her and Katrina's characters' *Funds* scores will be at zero for four weeks. Jim's character will have only 1D in Funds and no access to his Wealth for three weeks. They better hope the characters don't run into trouble!

See the next chapter for suggestions on reducing the cost of buying a ship.

Using the Ship Scale Charts

For ships of 10 tons or less, look up the tonnage on the first chart to the scale of the ship.

For ships over 10 tons, you'll need to do a little work with one of two methods.

In the first way, look up the first two digits of the total tonnage on the second chart. Then count the number of digits after the first two numbers and look up the modifier on the second chart. Add together the numbers to get the ship's scale.

Example: One type of light fighter weighs 48 tons. The first two digits of its mass are 48, which has a base value of 9. There are no digits after it, so it gets a modifier of +5. The scale value of the ship is the base value plus the modifier, or 14 (9 + 5).

If you prefer scientific notation or are working with very large numbers, convert the tonnage to exponential format with two significant digits. Multiply the coefficient by 10 and look that number up on the first of the second set of charts to get the base value. Then, multiply the exponent by 5 to get the value modifier. Add the base value to the value modifier to get the scale value of the ship.

Example: Chiron, an asteroid in Earth's belt, has an approximate diameter of 180 kilometers and an approximate mass of 40 trillion metric ton, or 4×10^{15} when expressed in scientific notation. Multiplying the coefficient by 10 makes 40, which has a base value of 8. Multiplying the exponent of 15 by 5 gives a modifier of 75. Adding them together makes 83, which is the asteroid's scale value.

Maintenance

Ships won't run forever without maintenance. Everyone knows that life support units require recharging, reactors require refueling, and weapons need reloading, but these steps are only part of the equation. Drives require periodic inspection, sensors need recalibration, energy weapons need cleaning, and the computer demands an occasional diagnostic checkup. Without this maintenance, the ship will suffer drive failures, sensor burn-out, and random computer errors before it unceremoniously falls apart. Granted, the crew can do a lot of the work during the down time when the ship travels between the stars, but the ship must still undergo a thorough check of all systems at an atmospheric or orbital repair facility at least once a year (except for overengineered long-range exploration and military vessels that are built to withstand the stresses of space travel for far longer periods and carry the spare crew and components to effect such checks). This check costs 6,000 credits multiplied by number in front of the "D" of the ship's hull Toughness. Ships bought used should have a check done immediately in order to expose any malfunctions.

An Unexplainable Noise _

Gamemasters who need a way to shake the situation on a ship should remember that technology isn't perfect: A replaced part might be faulty (used more so than new). It might be slightly incompatible with the existing parts. The technician might not have got the installation quite right. Or all of them ...

If the check is delayed, on any shipboard setback (either from a game-enhancing card result or because someone failed with a Critical Failure), the vessel exhibits a new malfunction in addition to any other ill results. For every month you delay the check, the cost of it increases by 10% (+3 to the price difficulty).

All of this assumes you're flying the ship conservatively. Characters who take it into combat immediately bring on even more repair expense. Even if the ship doesn't take damage from weapon hits, combat maneuvering stresses ships to the limit. Any time your ship engages in combat, you should schedule a maintenance check immediately. Blowing it off has the same effect as delaying a regularly scheduled inspection. Military ships with extended missions usually rendezvous with repair vessels to receive their maintenance on the fly, but most folks probably won't have that luxury. Naturally, they'll have to find their own repair facility, a task that should prove every bit as challenging as actually buying the ship.

Repairs

Characters may attempt to effect repairs during combat, in transit, or while docked in a safe haven. The base *flight systems repair* difficulty for fixing damaged systems is 10. Use the "Repair Modifiers" chart to alter this difficulty based on the situation. All modifiers assume technicians have proper tools; some toolkits provide up to a +1D bonus for those with the *flight systems repair* skill. Most starships carry at least one toolkit and the most essential spare parts in storage lockers near the engineering spaces. Most space-faring laws require captains to maintain stocks of these materials, though casual enforcement, lax resupplying, or financial restraints do not always ensure such materials remain on hand.

Use the accompany "Repairs" cost chart to get a general idea of the price of fixing the ship. Labor is extra; see the suggestions in the "Docking and Repair Fees" section on page 9 of chapter 1.

Of course, the gamemaster has the final say on the cost of replacement parts (used parts cost less than new), the ability to find them, and the effectiveness of field-expedient alternatives.

Modifications

Players will certainly want to improve their ship over the course of the campaign. These modifications are limited by the competency of the technicians involved, the design limitations of the vessel, and the owner's available credits.

Armor may be improved up to a value equal to the hull Toughness. Life-support and cargo module upgrades (skill bonuses) take up no additional space and have no limit on their alteration. Other components may be modified as long as there's space for the upgrade and enough power coming from the plant.

Replacing components is also a possibility. Shipyards or parts supply firms will give characters 5% of new cost for damage parts (if they buy them at all), depending on extent of damage, and 15% of new cost for a used but serviceable part. They may give an additional 5% to 10% if the part is in high demand.

The cost of modifying a component using new parts equals the same cost as purchasing an upgrade for it at initial design. Used or refurbished parts may reduce the cost.

Maintenance Costs _

Round all values to the nearest credit.

> **Atmosphere recharging:** Number of people times 100 plus number of months times 100

> **Food restocking:** Use costs in "Food Processor Supplies" table

> **Power plant refueling:** 30% of initial cost

> **Missile weapons:** See descriptions

> **Delay maintenance:** +10% to base cost (+3 to price difficulty)

Repairs _

Costs _

Round all values to the nearest credit.

> **Very Lightly damaged system:** 1% of initial cost (+1) to price difficulty

> **Lightly damaged system:** 10% of initial cost (+3 to price difficulty)

> **Heavily damaged system:** 25% of initial cost (+7 to price difficulty)

> **Severely damaged system:** 50% of initial cost (+15 to price difficulty)

> **Destroyed system:** Replace at full price

Repair Modifiers _

Condition	Modifier
Very Light damage	-3
Light damage	0
Heavy damage	+5
Severe damage	+10 or more
Parts available	0
Some parts available	+10
No parts available	+20
Using makeshift tools	+15

Converting to Price Difficulties _

For maintenance and repairs costs, use the credits value to determine the price difficulty, using the chart on page 103 of the *D6 Space Rulebook*.

Accessing D6 Space Ships File 3 ...

Quirky Ships _

What's in this Chapter

That new ship you're drooling is a shimmering mass of steel, chrome, and blasters ... and you can't afford it. Now what?

Or perhaps you want a ship with a few definitely nonstandard items. How can you manage it?

This chapter discusses how to customize ships with Disadvantages, Advantages, and Special Abilities.

Disadvantages

As an optional rule, there is one possibility to reduce the cost of a spacecraft ... and that's to find one with personality and quirks. To represent this, the ship's designer may give Disadvantages to the ship (or, in rare cases, the ship's owner). For each rank given, deduct 1 from the final price difficulty of a vessel, or 10,000 credits. All Disadvantages so given **must** be approved by the gamemaster, and should be considered carefully. The final cost of a vehicle can never be reduced to less than half its total cost (rounded up) through Disadvantages.

Example: A pilot has her eyes on a sparkling new scout ship, which has a price difficulty of 45. This is too rich for her blood. However, the salesman does have a used version of that model that was almost destroyed in a space battle; the repairs have made its hyperspace drive unreliable. The salesman also chuckles nervously that it might be "cursed." In fact, the ship has Advantage Flaw (R2) and Bad Luck (R2), reducing its cost to 41. Regardless of what else is wrong with the ship, its price could never go below 23.

Here are some example applications of various Disadvantages:

> **Achilles' Heel:** This usually represents a vulnerability or physical defect with the ship. Thus a ship with Rot may be held together with duct tape and prayer, forcing its crew to periodically pause to reassemble pieces; or Vulnerability (R3) might represent a specific part that causes double damage if targeted (say, at +10 difficulty). Any Disadvantages that rely on an atmosphere require the ship to be atmosphere capable. As an optional three-rank Achilles' Heel, a ship may have one permanent, unrepairable level of damage (starting at Very Light); additional permanent damage may be acquired for additional ranks of Achilles' Heel (three ranks per additional level of damage); in this case, the vessel also suffers the effects of that level of damage, although passengers do not suffer damage effects.

> **Advantage Flaw:** Some system of the ship is unreliable, and may break down entirely. This may also be used with the optional Advantages system (see pages 50–51).

> **Age:** At one rank, this Disadvantage is handled through roleplaying like its character counterpart; people view the ship as being too old or too unproven to get the job done. At two ranks, an old ship will have its difficulties increased by +1 for any action that pushes its systems beyond bare functionality, while a young ship has all repair and upgrade difficulties increased by +1 due to the unavailability of new parts.

Salvage Ships _

Salvage shipyards are one way of getting a ship. Granted, no shipyard has more than a dozen or so space-worthy vessels to choose from but, hey, they sure are cheap.

The ships are almost always paid for, and they show it. Ships that end up in one of these dives were probably traded for a ticket on a safe liner inward, or enough credits to set up a dirt farm or bar. In other words, these vessels are dangerous.

Most of them have a permanent damage level or a reduced system that cannot be repaired. Granted, this means they cost well below that of "new" cost, but they are dangerous and easily destroyed. Still, because most of them are reconditioned freighters with maybe a little more firepower than their original specs showed, they're ideal for adventuring groups.

Seldom do these shipyards have vessels larger than a big freighter or scout ship. Most are designed to land (or crash) in an atmosphere, since the expense of an orbiting station is not possible for these ship dealers.

Of course, all of these buys are "consumer beware." Glitches and system ghosts are to be expected, looked for — and accepted. If you had the cash or opportunity, you'd buy from a more respectable shipyard or you'd go to a military auction. These ships are the bottom-of-the-barrel.

Oh, and those "hidden gems" you hear about finding buried at the bottom of the barrel? Sure, anything's possible, but realize that most ships as these lots have been picked over by its dealer. Most of the time, the ship won't really be worth the little money you buy it for.

But, hey, it's your ticket to the stars.

> **Bad Luck:** The ship is cursed. Any roll that fulfills the Bad Luck condition while directly utilizing the ship will be affected. (Thus a *piloting* roll can suffer its affects, while a *melee combat* in the gym cannot.) Obviously, this Disadvantage is cinematic.

> **Burn-out:** This can apply to various ship systems.

> **Cultural Unfamiliarity and Employed:** These Disadvantages are generally unsuitable for ships.

> **Debt:** This is one of the rare Disadvantages that would be incurred by the ship's owner; the person borrowed money to pay for part of the ship. Failure to fulfill the Debt condition will result in the ship being repossessed.

> **Devotion:** This could apply to a ship with a stubborn AI, or a bio-organic ship with its own urges and goals.

> **Enemy:** The ship may have been stolen, or belong to an unpopular race. Regardless, some person (or people) will harass or attack the ship on sight. Efforts to dissuade the attackers will fail until the Enemy is dealt with (and the Disadvantage paid off).

> **Hindrance:** Hindrance cannot affect any skill that has a bonus provided by the vessel. Thus a ship that provides +1D to *piloting* cannot have a Hindrance that penalizes *piloting*. In addition, any skills so hindered must have a reasonable chance at being used (or useful) to the ship. Move penalties cannot be taken in lieu of the skill penalties.

> **Infamy:** Perhaps the ship was formerly a pirate vessel or responsible for notorious deaths. Regardless, it will be treated poorly by other ship captains and authorities.

> **Language Problems:** The vessel's controls and programming languages are wildly atypical, and no amount of tinkering will make it compatible.

> **Prejudice:** This is akin to Infamy, only it refers to a class of ships that are unpopular in this neck of the galaxy.

> **Price:** Some aspect of the ship requires something unusual to power or maintain it. For example, the interstellar drive may require rare crystals to operate.

> **Quirk:** The ship has some significant quirks that require either living with or considerable effort to work around. For example, the ship might not dock easily (requiring a shuttlecraft to get to and from other ships), or the targeting computer may have a difficult time shutting off (continuing to fire even after the battle has ended). At acquisition, this Disadvantage is tied to a skill required to overcome it — usually *piloting* or *vehicle repair*.

> **Reduced Attribute:** This will only apply to Maneuvering or Hull Toughness, and only if the affected attribute hasn't been improved (either through thrusters, armor, or shields).

How this system is used is up to the gamemaster. If a number of ships are available, a failed but close Funds roll may have the difference made up in Disadvantages; the ship seller has a ship similar to the original one offered, only not quite as good. Alternatively, the Disadvantages may be unknown to the buyer (or mostly unknown, if Debt is taken). This can represent the haggling between the buyer and the seller, with the seller coming down in price because she knows the ship has problems she didn't disclose.

Damage and Disadvantages

As another separate option to introduce Disadvantages into ships, a Critical Failure on a failed *armor repair*, *flight systems repair*, or *gunnery repair* roll for a ship with Severe damage may introduce one or more ranks of Disadvantages — usually Quirks, Achilles' Heels, or Hindrances. In this case, such Disadvantages can exceed the limits of this chapter, at the gamemaster's discretion. For example, Hindrance might represent a reduction in the ship's Space Move or Interstellar Speed, or Reduced Attribute might affect the Hull Toughness of a ship with shields.

Paying off Disadvantages

While taking a Disadvantage may make it possible to afford a ship in the first place, getting rid of those flaws can be nearly impossible. Really, it's usually easier to melt the ship down into molten ore and recast it into a new, less-flawed form. But it's not impossible.

There are two different possibilities for getting rid of a ship's Disadvantages. The first is to pay money for its removal. If using the Funds system, getting rid of one level of a Disadvantage has a price difficulty equal to the current cost of the vehicle. Thus the scout ship with a difficulty of 41 (45 minus four ranks of Disadvantages) would require a Funds roll of 41 to remove one of those four levels. After so doing, a future roll of 42 would be required to remove another level. In the case of a Disadvantage that doesn't have a lower rank version (such as an R3 Achilles'

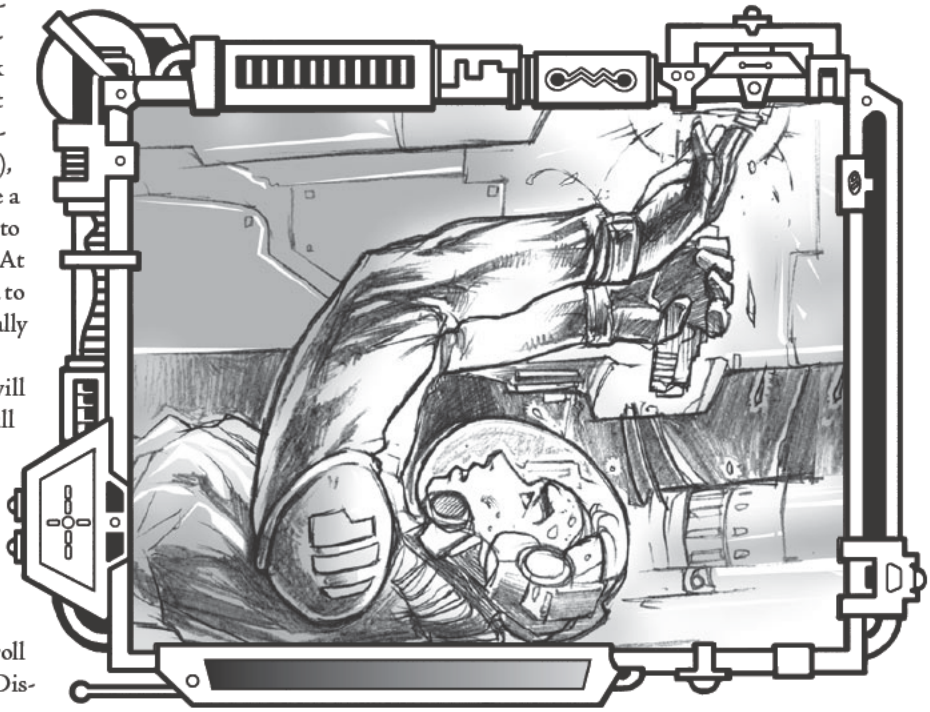

Heel), all the levels of the Disadvantage need to be paid off before it goes away; each level would need to be paid for with a separate roll. In games using credits, each level of Disadvantage costs 50,000 credits to remove.

The second way is to spend Character Points to remove the Disadvantage. The players' characters may pay 50 times the die code of the Disadvantage. They may pool their Character Points to do so. All the other rules concerning the removal of Disadvantages from p. 53 of the *D6 Space Rulebook* still apply.

Note that either of these two rules apply to Debt, even though that Disadvantage is technically taken by the buyer.

Advantages and Special Abilities

The Disadvantages system simulates ships with quirks and other oddities. A similar system can also be used to emulate ships that can do more than the average vessel.

Although uncommon, some ships may — with gamemaster approval — have abilities that are not otherwise accounted for in the rules. These are represented by levels of Advantages or Special Abilities. For each rank given, add 1 to the final price difficulty of a vessel, or 10,000 credits. All such options **must** be approved by the gamemaster, who should consider the implications carefully.

Most Advantages and Special Abilities are inappropriate for space ships, although of course creative shipbuilders can find odd uses for these options. Special Abilities in ships are usually uncommon, and they may get ranks of Disadvantage added at no additional modifier.

Some of the most appropriate Advantages are:

> **Authority:** This represents a vessel that obviously holds sway over some aspect of space merely by its presence. For example, a ship may be a galactic police vessel, a flagship for a space-faring empire, or an interstellar humanitarian aid ship. Regardless, other ships will give the vessel access or wide lanes to do its duty. Note that the captains (and often other crewpersons) of such ships either have appropriate levels of Authority themselves, or they — and quite likely their ship — have levels of Enemy (if the captains are using such ships without permission).

> **Contacts or Patron:** It is unlikely for a spaceship to "know" anyone itself, although it might be possible if the ship has a sophisticated AI or is a bio-organic construct.

> **Equipment:** This Advantage is good to represent some odd piece of equipment that can't be simulated any other way.

> **Fame:** The ship will be treated better than normal. Of course, great things are often expected of the famous.

Under no circumstances should a ship have the Size Advantage. Instead, ships should buy up their size normally (or be made smaller), if so desired. Wealth and Trademark Specialization are likewise impossible, although a ship could simulate the renowned aspect of Trademark Specialization with Fame.

It's impossible to detail all the Special Abilities that a ship might have, although some of the more common possibilities are as follows.

> **Atmospheric Tolerance or Water Breathing:** These can be bought by a ship that's already atmosphere-capable to make it compatible with additional or extreme environment — usually water.

> **Blur, Darkness, Invisibility, and Master of Disguise:** These are all useful for ships with stealth or other unusual abilities that thwart their detection.

> **Extra Sense and Infravision/Ultravision:** These abilities give the ship the ability to sense some form of energy or phenomenon that is usually impossible for vessels to detect. For example, a shuttlecraft might be able to detect wormholes. What things are detectable or undetectable should be established by the gamemaster beforehand.

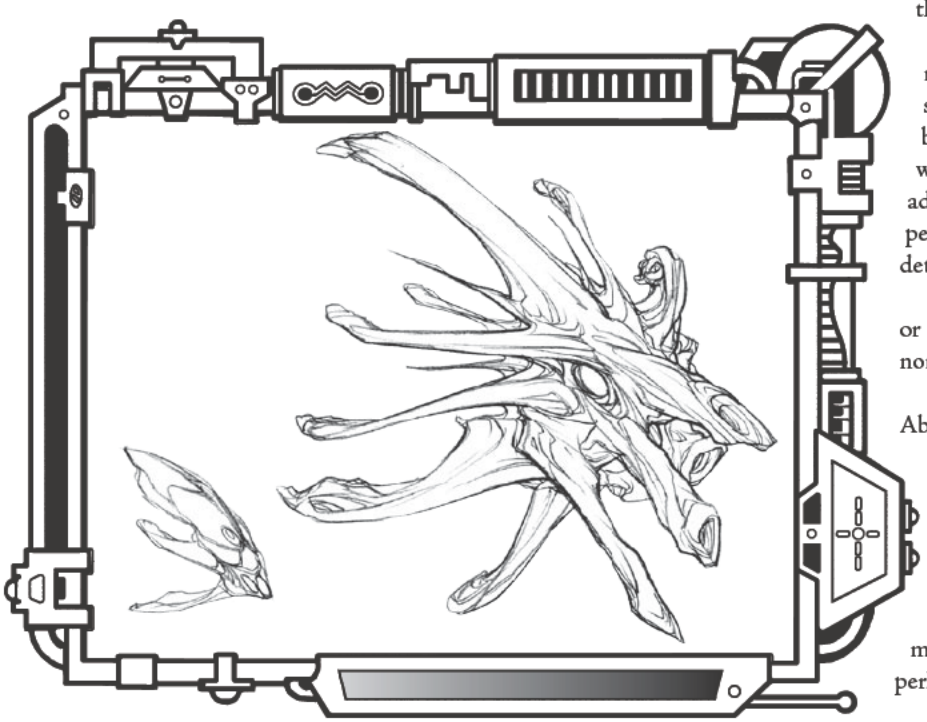

> **Fast Reactions:** For whatever reason, the ship is fast. Unless the ship is autonomous (via an AI or bio-organic nature), the pilot chooses when to activate the extra actions. In addition, the pilot receives the +1D per rank bonus to his *Perception* when determining initiative.

> **Fear:** Because of size, armament, or other aura, the ship is scarier than normal.

> **Hypermovement:** This Special Ability can only be used to increase the in-planet movement of an atmospheric capable vessel, as per the chart on page 43.

> **Immortality:** It is actually possible for a ship to be immortal. Perhaps it is destined to survive no matter what (such as a "ghost ship"), or perhaps it is a bio-organic vessel that does

not die as the average mortal understands it. Any damage is still passed on to the passengers, as per normal; the crew can all die, even if the ship cannot.

> **Intangibility:** Some ships are rumored to be able to use the space-time warping capabilities of their interstellar drive in-system, enabling them to "phase out" of the universe for short periods of time.

> **Luck:** While some ships are cursed, others seem to be made out of horseshoes and clover. Such ships often have Fame as well.

> **Omnivorous:** This Special Ability is usually inappropriate for most campaigns that don't make an issue about refueling. However, in campaigns that have more stringent fuel requirements, Omnivorous can represent a ship that has many other refueling options: ram scoops, alternate processing units, and so on. In this case, the vessel will still require an amount of fuel (as determined by the gamemaster), but the ship will have more options as to where it gets that fuel from.

> **Teleportation:** This ability enables the ship to breach the normal space-time continuum, and in so doing move up to 10 space units per rank instantly. The ability can only be used to teleport this number of units maximum per day; thus a ship with two ranks of this Special Ability could make one 20-space-unit jump, four five-space-unit jumps, or 20 one-space-unit jumps. Otherwise the rules are the same as the Special Ability of the same name.

> **Ventriloquism:** The ship can generate some kind of sensory ability that can fool other ships, up to three space units away per rank.

Any abilities that add to an attribute or skill are generally unavailable, since those abilities can be purchased through computer or system upgrades. However, it's possible that some of these might represent abilities unavailable through other means. In this case, the cost per level should generally be greater than the cost of similar enhancements; if the 10,000-credit cost is not sufficient, the gamemaster can adjust this as necessary. These include Accelerated Healing, Ambidextrous, Armor-Defeating Attack, Attack Resistance, Confusion, Endurance, Enhanced Sense, Environmental Resistance, Hardiness, Immunity, Increased Attribute, Life Drain, Multiple Abilities, Natural Armor, Natural Hand-to-Hand Weapon, Natural Ranged Weapon, Paralyzing Touch, Sense of Direction, Skill Bonus, Skill Minimum, and Uncanny Aptitude.

Other abilities are reliant on a humanoid, organic, or spiritual body to make sense. Although it's feasible a ship might use them, they would be incredibly rare. These include Animal Control, Elasticity, Glider Wings, Longevity, Possession (Limited or Full), Quick Study, Shapeshifting, Silence, Transmutation, and Youthful Appearance.

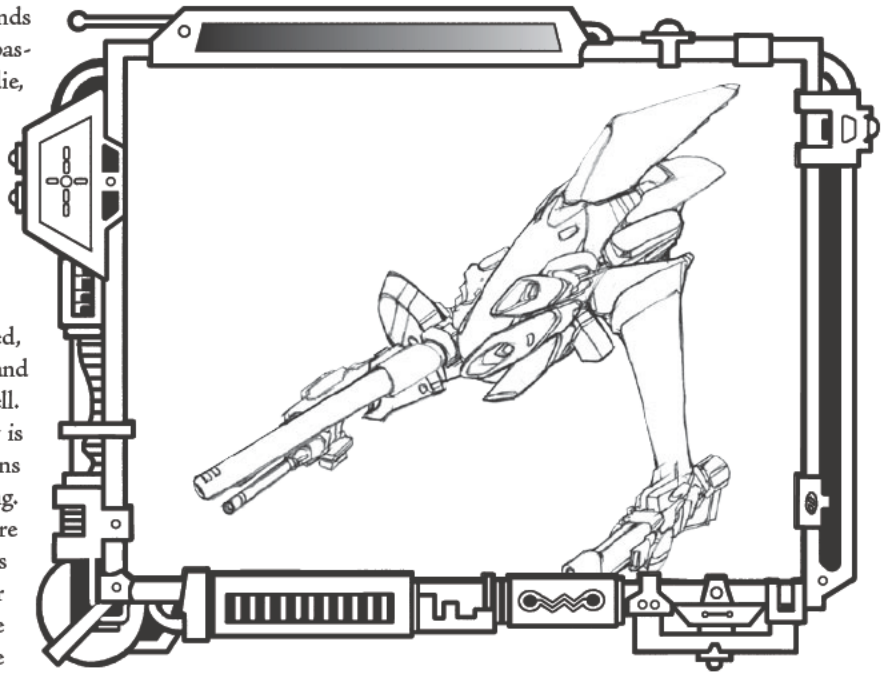

Damage, Advantages, and Special Abilities

For those games using the "Damage and Disadvantages" option from earlier in this chapter, the gamemaster may opt — instead of adding Disadvantages — to instead remove Advantages or Special Abilities as the result of a Critical Failure on a failure.

Buying Advantages

There are three different possibilities for adding Advantages to ships. The first is to pay money for its addition. If using the *Funds* system, adding one rank of an Advantage has a price difficulty equal to the current cost of the vehicle. Thus the scout ship with a difficulty of 45 would require a *Funds* roll of 45 to add one rank of an Advantage or one point of a Special Ability. After so doing, a future roll of 46 would be required to add another rank or point. In the case of an Advantage or Special Ability that costs more than one point (such as Silence), all the ranks or points of the Advantage need to be bought before it is added; each level would need to be paid for with a separate roll. In games using credits, each rank of Advantage or point of Special Ability costs 50,000 credits to add.

The second way is to spend Character Points to add the Advantage or Special Ability. The players' characters may pay 25 times the die code of the Advantage or Special Ability. They may pool their Character Points to do so. All the other rules concerning the addition of Advantages or Special Abilities from pages 53–54 of the *D6 Space Rulebook* still apply.

The third way to add an Advantage or Special Ability is to add one more rank of Disadvantages than the new option added. Thus to add a rank 2 Authority a ship might acquire a rank 3 Enemy; a ship that was christened and repainted as a galactic police vessel now has to deal with the scum of the universe.

Accessing D6 Space Ships File 4...

Example Ships _

What's in this Chapter

This chapter offers a sampling of popular ships built with on of the three different systems suggested in the ship design chapter. Suggested images are included, but actual configurations depend on the specifics of the setting.

Key to Descriptions

In these descriptions, "areas" refers to area units, "eu" stands for "energy units," and "cr" means "credits."

For general information about various modules in each ship, consult the "Revised Ship Design" chapter.

Four-Factor Ships

Drop Ship

Drop ships are gunboats designed to transport troops to other vessels and planetary surfaces more efficiently than outfitting a cruiser for atmospheric duty. More heavily armed versions are often used as patrol craft. Because of their short-distance service, they generally don't get interstellar drives.

The first ship is outfitted for a squadron, while the second provides a means of getting a ground assault vehicle and its crew onto a planet.

Troop Transport

Crew: 2 **Passengers:** 40

Life-Supporting Modules

standard bridge (2 stations, 8 areas, 4 tons, 0.8, 200 cr) with +2 *comm*, +1D *gunnery*, +2 *piloting*, +2 *sensors*, and +2 *shields* upgrades (5 eu, 3,300 cr); passenger area with seating for 40 (42 areas, 21 tons, 3.8 eu, 2,100 cr)

Cargo Modules

bulk (10 areas, 10 tons, 1 eu, 250 cr)

Life-Support Supplies: atmosphere (45 person-areas/1 month, 4,500 cr)

Weapons

1 laser cannon (3 areas, 4 tons, 11 eu, 9,800 cr, five arcs, range 3/12/25, damage 4D)

1 missile launcher (2 areas, 3 tons, 2 eu, 3,000 cr, forward arc, range 2/3/7)

2 noisemakers (2,000 cr; move up to 10 space units from launching vessel; +6D/+18 to attack difficulty of active homing missiles and +1D/3 difficulty modifier to enemy's sensors; remains active for 5 rounds) in 2 ammo bays (2 areas, 4 tons, 0.8 eu, 200 cr)

In-System Drive (12 areas, 12 tons, 30 eu, 13,000 cr)

Move: 10 (space), 500 (atmosphere, 1,450 kph)

Maneuverability: 0

Interstellar Drive: None

Total Energy Requirements: 61

Power Plant: 100 energy units generated (8 areas, 13 tons, 14,500 cr); 2 burst capacitors (20 eu each, 2 areas, 2 tons, 800 cr)

Hull Toughness: 2D (44 tons, 22,000 cr)

Atmosphere Capability: streamlining (11 tons, 4,400 cr), landing gear (9 tons, 3,300 cr)

Armor: +2D (24 tons, 24,000 cr)

Shields: +2D (2 areas, 4 tons, 6 eu, 36,000 cr)

Total Tonnage: 165

Scale: 17 **Total Area Units:** 91

Length: 46 meters (cylinder), 31 meters (ellipsoid), 23 meters (wedge)

Total Cost (new): 138,850 credits/*Price Difficulty:* 34

Ground Vehicle Transport

Crew: 2 **Passengers:** 6

Life-Supporting Modules

standard bridge (2 stations, 8 areas, 4 tons, 0.8, 200 cr) with +2 *comm*, +1D *gunnery*, +2 *piloting*, +2 *sensors*, and +2 *shields*

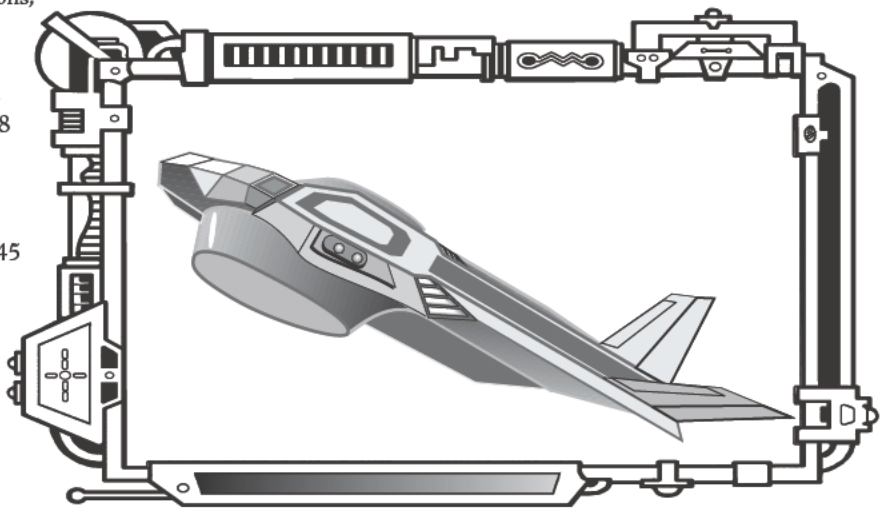

Accessing: D6 Space Ships File 4
Notes: Found furry stowaway.

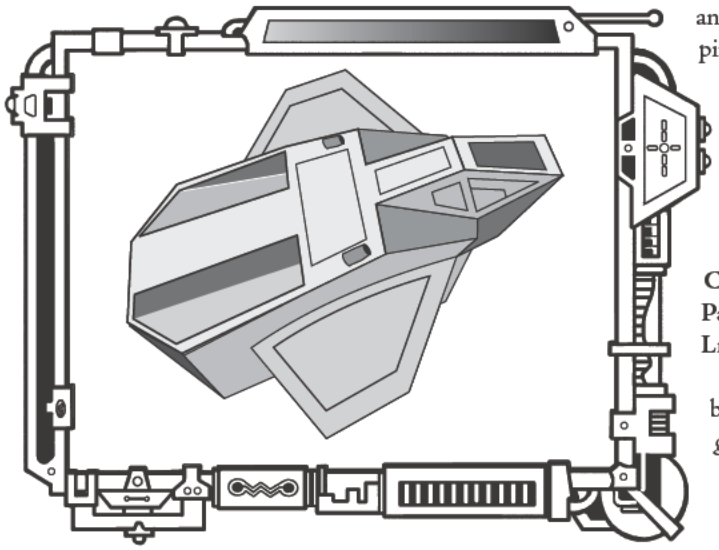

upgrades (5 eu, 3,300 cr); passenger area with seating for 6 (8 areas, 4 tons, 0.8 eu, 400 cr)

Cargo Modules

bulk (10 areas, 10 tons, 1 eu, 250 cr); vehicle bay (24 areas, 34 tons, 6.8 eu, 1,800 cr)

Life-Support Supplies: atmosphere (23 person-areas/1 month, 2,300 cr)

Weapons

2 blaster cannon (2 areas, 4 tons, 18 eu, 12,200 cr, forward arc, range 6/15/24, damage 3D each, fire-link bonus of +3)

1 machine cannon (1 area, 1 ton, 1 eu, 2,900 cr, five arcs, range 4/8/12, damage 7D)

Machine cannon ammunition (600 units, 500 cr) in 1 ammo bay (1 area, 2 tons, 0.4 eu, 100 cr)

In-System Drive (10 areas, 10 tons, 24 eu, 8,500 cr)

Move: 8 (space), 400 (atmosphere, 1,150 kph)

Maneuverability: 0

Interstellar Drive: None

Total Energy Requirements: 65

Power Plant: 100 energy units generated (8 areas, 13 tons, 14,500 cr)

Hull Toughness: 2D (50 tons, 25,000 cr)

Atmosphere Capability: streamlining (19 tons, 5,000 cr), landing gear (10 tons, 3,750 cr)

Armor: +2D (24 tons, 24,000 cr)

Shields: +2D (2 areas, 4 tons, 6 eu, 36,000 cr)

Total Tonnage: 183

Scale: 17

Total Area Units: 73

Length: 37 meters (cylinder), 25 meters (ellipsoid), 19 meters (wedge)

Total Cost (new): 140,700 credits/*Price Difficulty:* 35

Interceptor Patrol Craft

Patrol craft are the "space cops" of a given planetary system. They are meant to find and capture smugglers, customs violators, and independent pirates. If anything bigger comes their way, the patrol craft are supposed to high-tail it for home or help, depending on their orders.

Nonetheless, most patrol craft are deceptively tough and agile, and this version is no different. Though it doesn't have quite the prisoner capacity as a patrol frigate (see its entry herein), the interceptor is fast and dangerous.

Crew: 2

Passengers: 2 passengers, 4 prisoners in brig

Life-Supporting Modules

group airlock (4 areas, 2 tons, 0.4 eu, 300 cr); standard bridge (2 stations, 8 areas, 4 tons, 0.8, 200 cr) with +1D *gunnery*, *shields*, and *sensors* upgrades (3 eu, 2,700 cr), pilot autofunction program (15 eu, 8,000 cr, 3D each in *piloting* and *gunnery*), and ship indentifier (1,000 cr); brig (16 areas, 8 tons, 1.6 eu, 2,000 cr); lounge (6 areas, 3 tons, 0.6 eu, 400 cr) with food processor upgrade (25 cr); medical bed (3 areas, 1.5 tons, 0.3 eu, 400 cr); passenger area with seating for 2 (4 areas, 2 tons, 0.4 eu, 400 cr); two-person room (14 areas, 7 tons, 1.4 eu, 700 cr) with basic entertainment unit (50 cr); hallways to separate and connect rooms (16 areas, 8 tons, 0.8 eu, 375 cr)

Cargo Modules

bulk (weapons and environmental suit lockers, 6 areas, 6 tons, 0.6 eu, 150 cr)

Life-Support Supplies: food storage (8 areas, 4 tons, 4 eu, 80 cr); standard food supply (8 people/5 months, 4 tons, 4,000 cr); atmosphere (20 person-areas/5 months, 10,000 cr)

Weapons

1 laser cannon (5 areas, 7 tons, 21 eu, 19,800 cr, five arcs, range 7/20/31, damage 6D)

1 missile launcher (3 areas, 4 tons, 3 eu, 5,000 cr, forward arc, ammo 1, range 3/4/8, damage per missile)

4 active homing (3,200 cr, damage 5D) in 4 ammo bays (4 areas, 8 tons, 1.6 eu, 400 cr)

In-System Drive (14 areas, 14 tons, 36 eu, 12,500 cr)

Move: 12 (space)

Maneuverability: 0

Interstellar Drive: None

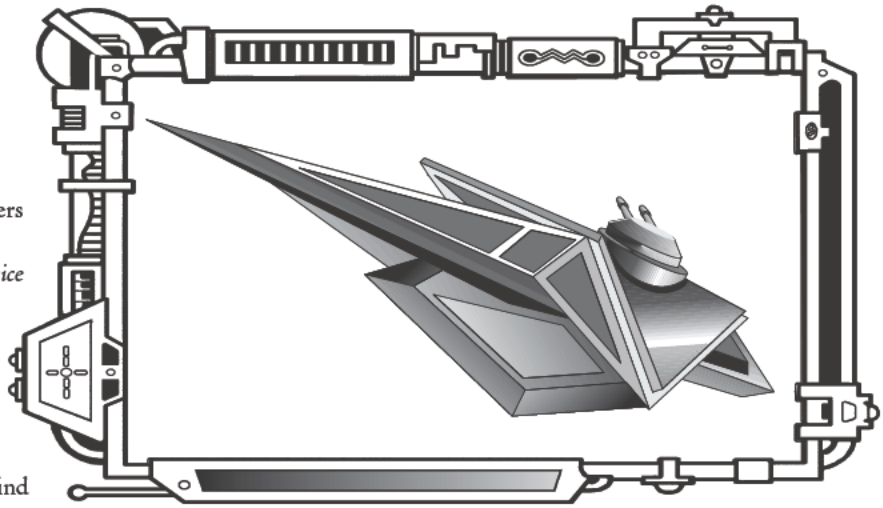

Total Energy Requirements: 94
Power Plant: 145 energy units generated (11 areas, 19 tons, 20,500 cr)
Hull Toughness: 2D+1 (62 tons, 31,000 cr)
Atmosphere Capability: None
Armor: +2 (18 tons, 18,000 cr)
Shields: +2D (6 areas, 3 tons, 3 eu, 54,000 cr)
Total Tonnage: 185
Scale: 17 **Total Area Units:** 128
Length: 64 meters (cylinder), 43 meters (ellipsoid), 22 (spheroid), 32 meters (wedge)
Total Cost (new): 69,470 credits/*Price Difficulty:* 27

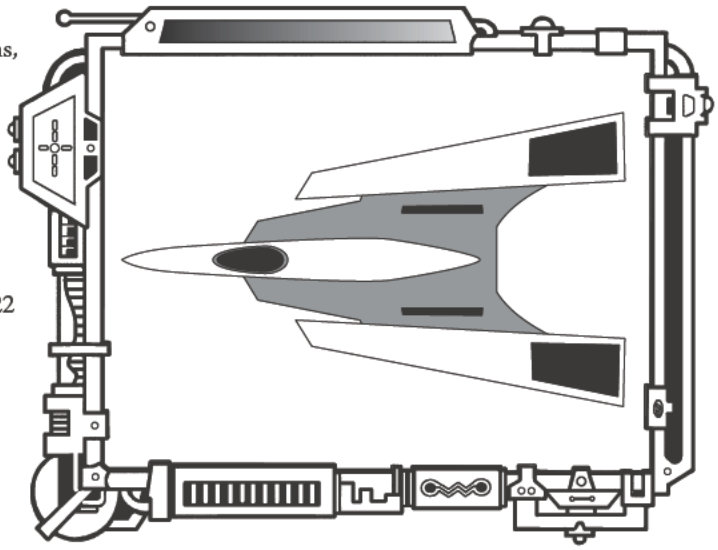

Light Defender

In one form or another, nearly every high-tech worlds have these small vessels darting about their planets or battleships. Light defenders are commonly carried on battlecruisers and used for the protection of those vessels.

The Wasp class of light defenders, though admired for its quickness and maneuverability, has been dubbed "flash and burn" by their pilots, due to their tendency to explode after taking only a few hits.

Hornet Class

Crew: 1 **Passengers:** 0
Life-Supporting Modules
standard bridge (4 areas, 2 tons, 0.4 eu, 100 cr) with +1D *sensors* and *gunnery* upgrades (2 eu, 1,800 cr)
Cargo Modules: None
Life-Support Supplies: atmosphere (1 person/1 month, 100 cr)
Weapons
2 blaster cannons (2 areas, 4 tons, 22 eu, 8,000 cr, forward arc, range 8/25/38, damage 3D)
In-System Drive (10 areas, 10 tons, 24 eu, 8,500 cr)
Move: 8 (space)
Maneuverability: +2D (12 eu, 3,600 cr)
Interstellar Drive: None
Total Energy Requirements: 61

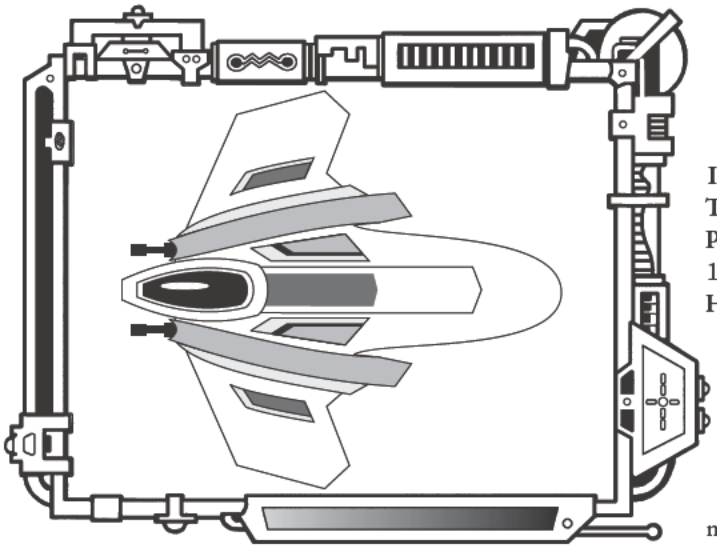

Power Plant: 85 energy units generated (7 areas, 11 tons, 12,500), burst capacitor (20 eu generated, 1 area, 1 ton, 400 cr)
Hull Toughness: 1D+1 (18 tons, 7,500 cr)
Atmosphere Capability: None
Armor: 0
Shields: +2D (1 area, 2 tons, 6 eu, 13,500 cr)
Total Tonnage: 48
Scale: 14 **Total Area Units:** 25
Length: 13 meters (cylinder), 9 meters (ellipsoid), 5 meters (spheroid), 7 meters (wedge)
Total Cost (new): 57,600 credits/*Price Difficulty:* 26

Wasp Class

Crew: 1 **Passengers:** 0
Life-Supporting Modules
compact bridge (2 areas, 1 tons, 0.2 eu, 75 cr)
Cargo Modules: None
Life-Support Supplies: atmosphere (1 person/1 month, 100 cr)
Weapons
1 laser cannon (4 areas, 5 tons, 9 eu, 11,000 cr, forward arc, range 3/12/25, damage 5D)
1 torpedo launcher (2 areas, 3 tons, 2 eu, 5,000, forward arc, range 2/3/7, damage 9D)
In-System Drive (12 areas, 12 tons, 30 eu, 10,500 cr)
Move: 10 (space)
Maneuverability: +3D (18 eu, 5,400 cr)
Interstellar Drive: None
Total Energy Requirements: 60
Power Plant: 100 energy units generated (8 areas, 13 tons, 14,500)
Hull Toughness: 1D+1 (21 tons, 7,500 cr)
Atmosphere Capability: None
Armor: 0
Shields: 0
Total Tonnage: 55
Scale: 14 **Total Area Units:** 28
Length: 14 meters (cylinder), 10 meters (ellipsoid), 5 meters (spheroid), 7 meters (wedge)

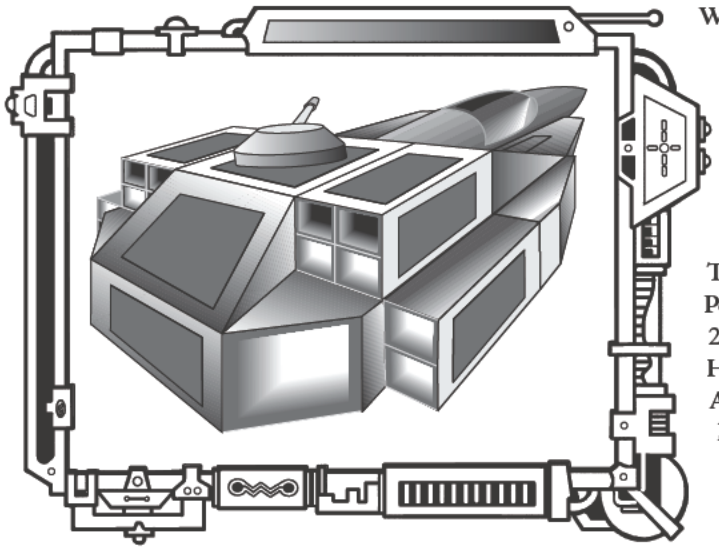

Total Cost (new): 54,075 credits/*Price Difficulty:* 26

Light Freighter

The workhorse of the mercantile industry, light freighters make short runs between established and colony worlds. Unfortunately, it's also popular prey for pirate assaults more often than megacorporate executives care to admit.

The primary feature of a freighter is its bays, capable of carrying bulk equipment, fragile wares, and so on. This versatility allows independent freighter captains to find work with virtually any megacorporation.

This is also the most common template for other small-to-mid-range vessels: Add some nice paint and luxury upgrades to the interior and a flashy name, and this sample ship serves well as a yacht. Stock the ship with survey equipment and long-term supplies, and it becomes a large research vessel.

Crew: 3 **Passengers:** 2

Life-Supporting Modules

standard bridge (3 stations, 12 areas, 6 tons, 1.2 eu, 300 cr) with +2 *comm*, +1 *gunnery*, and +1D+1 *sensors* upgrades (3 eu, 2,100 cr), pilot autofunction program (15 eu, 8,000 cr, 3D each in *piloting* and *gunnery*), and ship indentifier (1,000 cr); hydroponics (5 areas, 2.5 tons, 0.5 eu, 500 cr); lounge (30 areas, 15 tons, 3 eu, 1,500 cr) with food processor upgrade (25 cr); 2 two-person rooms (28 areas, 14 tons, 2.8 eu, 1,400 cr), 1 one-person room (10 areas, 5 tons, 1 eu, 500 cr); hallways connecting bridge to other areas (32 areas, 16 tons, 3.2 eu, 800 cr)

Cargo Modules

bulk (25 areas, 25 tons, 2.5 eu, 625 cr)

Life-Support Supplies: food storage (5 areas, 2.5 tons, 2.5 eu, 50 cr); standard food (5 people/5 months, 0.5 tons, 300 cr); atmosphere (14 people-areas/5 months, 1,400 cr)

Weapons

1 blaster cannon (1 area, 2 tons, 13 eu, 7,600 cr, forward/rear/port/starboard arcs, range 7/20/31, damage 3D)

In-System Drive (9 areas, 9 tons, 21 eu, 7,500 cr)

Move: 7 (space), 350 (atmosphere, 1,000 kph)

Maneuverability: 0

Interstellar Drive: 0.5 (7 areas, 21 tons, 50 eu, 26,000 cr); *backup:* 0.1 (3 areas, 9 tons, 10 eu, 6,000 cr)

Total Energy Requirements: 119

Power Plant: 160 energy units generated (12 areas, 21 tons, 22,500 cr)

Hull Toughness: 2D+1 (81 tons, 40,500 cr)

Atmosphere Capability: streamlining (21 tons, 8,100 cr); landing gear (17 tons, 6,075 cr)

Armor: +1D+1 (24 tons, 24,000 cr)

Shields: +1D (2 areas, 3 tons, 3 eu, 27,000 cr)

Total Tonnage: 282

Scale: 18 **Total Area Units:** 153

Length: 77 meters (cylinder), 51 meters (ellipsoid), 39 meters (wedge)

Total Cost (new): 111,100 credits/*Price Difficulty:* 32

Patrol Frigate

Primarily used by military or police organizations for patrol and anti-piracy operations, this small vessel has an 18-person crew that usually operates within a given patrol zone for two to three months at a time. Some other common names for this ship include customs frigate or interdictor.

Crew: 18

Passengers: 4 passengers, 12 prisoners in brig

Life-Supporting Modules

group airlock (4 areas, 2 tons, 0.4 eu, 300 cr); boarding tube (6 areas/extends to 12 meters, 6 tons, 1.2 eu, 6,000) with single airlocks on both sides (2 areas, 1 tons, 0.2 eu, 200 cr); standard bridge (6 stations, 24 areas, 12 tons, 2.4 eu, 600 cr) with +1D *gunnery*, *piloting*, *sensors*, *shields*, and *flight systems repair* upgrades (5 eu, 4,500 cr); brig (48 areas, 24 tons, 4.8 eu, 6,000 cr); infirmary (36 areas, 18 tons, 3.6 eu, 3,000 cr) with +1D *medicine* upgrade (1 eu, 900 cr); lounge (90 areas, 45 tons, 9 eu, 4,500 cr) with 2 food processor upgrades (50 cr); 2 one-person rooms (20

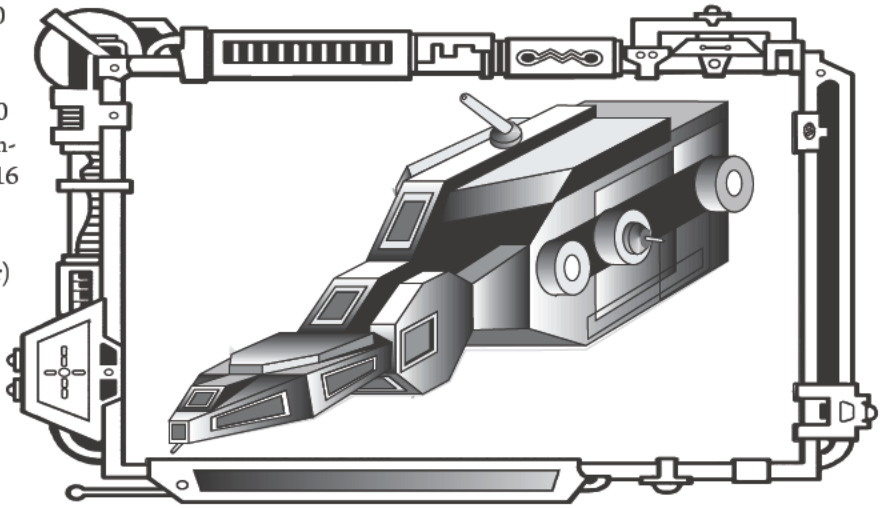

areas, 10 tons, 2 eu, 1,000 cr); 10 two-person rooms (140 areas, 70 tons, 14 eu, 7,000 cr); hallways connecting rooms (168 areas, 84 tons, 16.8 eu, 4,200 cr)

Cargo Modules

bulk (equipment and weapons lockers and impound storage, 12 areas, 12 tons, 1.2 eu, 300 cr); 34 escape pod bays (68 areas, 68 tons, 13.6 eu, 37,400 cr)

Life-Support Supplies: food storage (34 areas, 17 tons, 17 eu, 340 cr); standard food (34 people/5 months, 17 tons, 17,000 cr); atmosphere (72 people-areas/5 months, 36,000 cr)

Weapons

2 blaster cannons (8 areas, 10 tons, 42 eu, 30,000 cr, five arcs each, range 8/25/38, damage 5D each)

2 missile launchers (4 areas, 6 tons, 4 eu, 6,000 cr, forward, ammo 1 each, range 2/3/7, damage per missile)

5 passive-homing missiles (2,500 cr, damage 6D each) in 5 ammo bays (5 areas, 10 tons, 2 eu, 500 cr)

5 active-homing missiles (4,000 cr, damage 5D each) in 5 ammo bays (5 areas, 10 tons, 2 eu, 500 cr)

3 point-defense guns (3 areas, 6 tons, 6 eu, 8,000 cr, 1 forward, 1 port, 1 starboard, range 1/2/3, damage 5D each)

1 tractor beam (7 areas, 15 tons, 10 eu, 8,000, forward arc, range 5/15/30, damage 2D)

In-System Drive (12 areas, 12 tons, 30 eu, 10,500 cr)

Move: 10 (space), 500 (atmosphere, 1,450 kph)

Maneuverability: +1D (6 eu, 1,800 cr)

Interstellar Drive: 1.0 (12 areas, 36 tons, 100 eu, 51,000 cr); *backup:* 0.1 (3 areas, 9 tons, 10 eu, 6,000 cr)

Total Energy Requirements: 301

Power Plant: 325 energy units generated (23 areas, 46 tons, 44,500 cr); battery backup (30 energy units generated, 3 areas, 3 tons, 2,100 cr)

Hull Toughness: 3D+1 (330 tons, 274,500 cr)

Atmosphere Capability: streamlining (83 tons, 33,000 cr); landing gear (66 tons, 24,750 cr)

Armor: +2D (150 tons, 150,000 cr)

Shields: +3D (17 areas, 34 tons, 9 eu, 337,500 cr)

Total Tonnage: 1,212

Scale: 21

Total Area Units: 754

Length: 377 meters (cylinder), 252 meters (ellipsoid), 126 meters (spheroid), 189 meters (wedge)

Total Cost (new): 1,124,440 credits/*Price Difficulty*: 122

Pleasure Yacht

The pleasure yacht takes its passengers in private comfort from system to system. Some smugglers like to use them as many systems fear inconveniencing an important military or corporate executive by what seems like a meaningless search.

Crew: 5

Passengers: 4 passengers plus 2 servants

Life-Supporting Modules

group airlock (used as boarding area; 4 areas, 2 tons, 0.4 eu, 300 cr); standard bridge (4 stations, 16 areas, 8 tons, 1.6 eu, 400 cr) with +1D *gunnery*, *navigation*, *piloting*, *shields*, and *flight systems repair* upgrades (5 eu, 4,500 cr) and pilot autofunction program (15 eu, 8,000 cr, 3D each in *piloting* and *gunnery*); hydroponics (6 areas, 3 tons, 0.6 eu, 600 cr); infirmary (18 areas, 9 tons, 1.8 eu, 1,500 cr) with +1D *medicine* upgrade (1 eu, 900 cr); leisure room/relaxation chamber (12 areas, 6 areas, 1.2 eu, 800 cr); leisure room/entertainment (36 areas, 18 tons, 3.6 eu, 2,400 cr); lounge/dining room (90 areas, 45 tons, 9 eu, 4,500 cr); 5 one-person rooms (50 areas, 25 tons, 5 eu, 25,000 cr); 3 two-person rooms (42 areas, 21 tons, 4.2 eu, 21,000 cr); workroom (kitchen, 8 areas, 4 tons, 0.8 eu, 3,000 cr) with 2 food processor upgrades (50 cr); hallways connecting rooms (84 areas, 42 tons, 8.4 eu, 2,100 cr)

Cargo Modules

bulk (12 areas, 12 tons, 1.2 eu, 300 cr); 11 escape pod bays (22 areas, 22 tons, 4.4 eu, 12,100 cr) with cryogenic upgrades (1,375 cr)

Life-Support Supplies: food storage (30 areas, 15 tons, 15 eu, 300 cr); standard food (7 people/10 months, 7 tons, 7,000 cr); luxury food (4 people/10 months, 8 tons, 8,000 cr); atmosphere (47 people-areas/10 months, 47,000 cr)

Weapons

1 laser cannons (1 area, 2 tons, 6 eu, 13,600 cr, forward/rear/port/starboard arcs, range 3/12/25, damage 4D)

In-System Drive (7 areas, 7 tons, 15 eu, 5,500 cr)

Move: 5 (space), 250 (atmosphere, 750 kph)

Maneuverability: +1D (6 eu, 1,800 cr)

Interstellar Drive: 1.0 (12 areas, 36 tons, 100 eu, 51,000 cr); *backup:* 0.2 (6 areas, 18 tons, 20 eu, 11,000 cr)

Total Energy Requirements: 213

Power Plant: 235 energy units generated (17 area, 31 tons, 32,500 cr); battery backup (30 energy units generated, 3 areas, 3 tons, 2,100 cr)

Hull Toughness: 3D (209 tons, 104,500 cr)

Atmosphere Capability: streamlining (53 tons, 20,900 cr); landing gear (42 tons, 15,600 cr)

Armor: +2D (90 tons, 9,000 cr)

Shields: +1D (4 areas, 7 tons, 3 eu, 67,500 cr)
Total Tonnage: 749
Scale: 18 **Total Area Units:** 484
Length: 242 meters (cylinder), 161 meters (ellipsoid), 121 meters (wedge)
Total Cost (new): 580,725 credits/*Price Difficulty*: 79

Remote Outpost

The remote outpost can serve as a research station or a communications relay on an asteroid or moon. Add a small energy cannon, and it works well as a military defense station. It's designed to work automatically, having no means of supporting life, though it needs periodic checking for refueling and maintenance.

Defense Outpost

Crew: 0 **Passengers:** 0
Life-Supporting Modules
compact bridge (2 areas, 1 ton, 0.2 eu, 75 cr) with weapons autofunction program (15 eu, 8,000 cr, 3D in *sensors* and *gunnery*)
Cargo Modules: None
Life-Support Supplies: None
Weapons
2 blaster cannon (4 areas, 6 tons, 30 eu, 20,800 cr, five arcs, range 6/15/24, damage 5D each, fire-link bonus of +5)
In-System Drive: None
Interstellar Drive: None
Total Energy Requirements: 46
Power Plant: 55 energy units (5 areas, 7 tons, 8,500 cr)
Hull Toughness: 0 (9 tons, 4,500 cr)
Atmosphere Capability: None
Armor: 0
Shields: 0
Total Tonnage: 23 tons
Scale: 12 **Total Area Units:** 11
Length: 6 meters (cylinder), 4 meters (ellipsoid), 3 meters (wedge)
Total Cost (new): 41,875 credits/*Price Difficulty:* 25

Observation Outpost

Crew: 0
Passengers: 0
Life-Supporting Modules
compact bridge (2 areas, 1 ton, 0.2 eu, 75 cr) with research autofunction program (15 eu, 8,000 cr, 3D in *sensors* and *investigation*)
Cargo Modules: None
Life-Support Supplies: None
Weapons: None
In-System Drive: None
Interstellar Drive: None
Total Energy Requirements: 16
Power Plant: 25 energy units (3 areas, 3 tons, 4,500 cr)
Hull Toughness: 0 (3 tons, 1,200 cr)
Atmosphere Capability: None
Armor: 0
Shields: 0
Total Tonnage: 7 tons
Scale: 10 **Total Area Units:** 5
Length: 3 meters (cylinder), 2 meters (ellipsoid), 2 meters (wedge)
Total Cost (new): 13,775 credits/*Price Difficulty:* 24

Scout Ship

The military depends on scout ships for gathering information and transporting important couriers and some supplies. Megacorporations and independent adventurers use these ships for much the same reason. They are designed to be quick and agile, able to get their crews out of trouble as quickly as they got into it. Those with interstellar drives and long-term supplies can patrol the wastes of space for years.

Crew: 2 **Passengers:** 0
Life-Supporting Modules
standard bridge (2 stations, 8 areas, 4 tons, 0.8 eu, 200 cr) with +1D *piloting, comm, sensors,* and *gunnery* upgrades to each station (8 eu, 7,200 cr) and pilot autofunction program (15 eu, 8,000 cr, 3D each in *piloting* and *gunnery*); laboratory (4 areas, 2 tons, 0.4 eu, 1,500 cr); 2 coldsleep modules (2 areas, 1 ton, 0.2 eu, 400 credits)
Cargo Modules
bulk (equipment, storage, and weapons lockers, 4 areas, 4 tons, 0.4 eu, 100 cr)
Life-Support Supplies: food storage (3 areas, 1.5 tons, 1.5 eu, 30 cr); standard food supply (2 people/6 months, 1.2 tons, 1,200 cr); atmosphere (3 people-areas/6 months, 1,800 cr)
Weapons
1 laser cannon (5 areas, 6 tons, 7 eu, 13,000 cr, forward arc, range 3/12/25, 6D damage)
In-System Drive (15 areas, 15 tons, 39 eu, 13,500 cr)
Move: 13 (space), 650 (atmosphere, 1,850 kph)
Maneuverability: +1D (6 eu, 1,800 cr)
Interstellar Drive: 1.1 (13 areas, 39 tons, 110 eu, 56,000 cr)
Total Energy Requirements: 195
Power Plant: 250 energy units generated (18 areas, 35 tons, 37,500 cr)

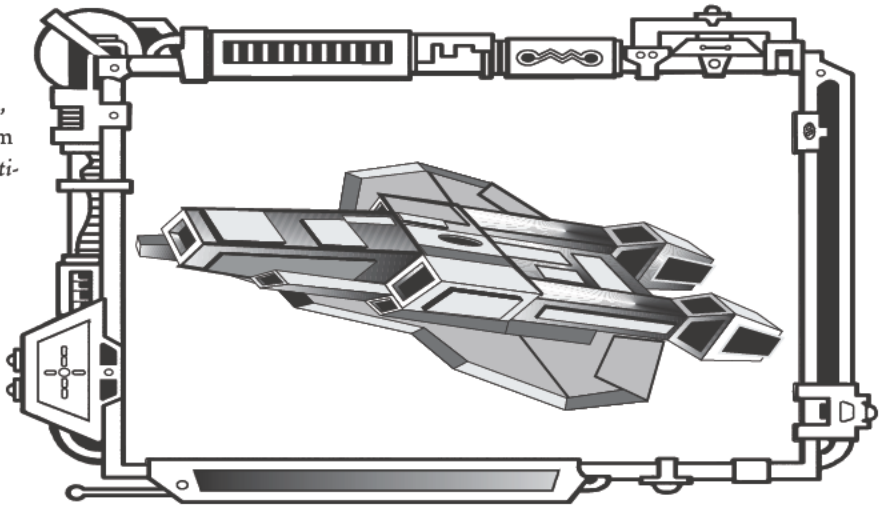

File Name: Example Ships
Notes: Moved Fluffy to empty cargo bay.

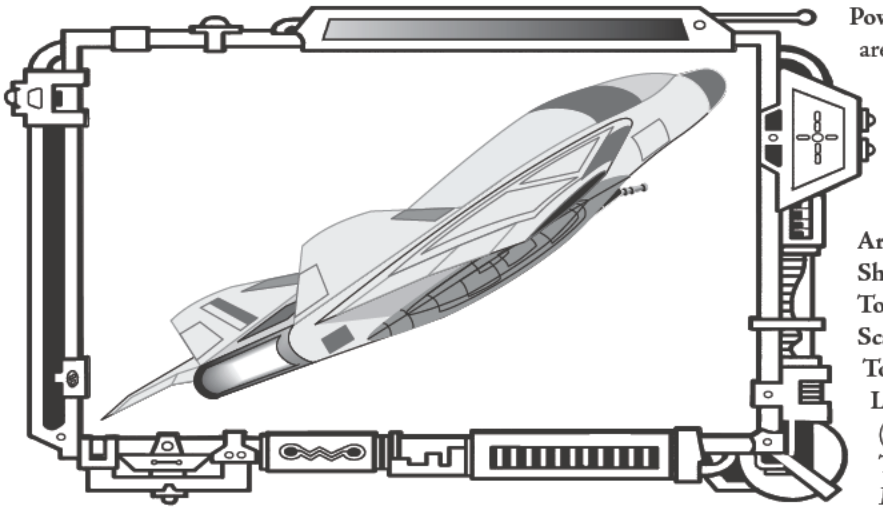

Power Plant: 85 energy units generated (7 areas, 10 tons, 12,500 cr)
Hull Toughness: 1D+2 (25 tons, 12,500 cr)
Atmosphere Capability: streamlining (7 tons, 2,500 cr), landing gear (5 tons, 1,875 cr)
Armor: +1D (8 tons, 7,500 cr)
Shields: +2 (1 area, 1 ton, 2 eu, 7,500 cr)
Total Tonnage: 89
Scale: 15
Total Area Units: 48
Length: 24 meters (cylinder), 16 meters (ellipsoid), 12 meters (wedge)
Total Cost (new): 69,820 credits/*Price Difficulty*: 27

Hull Toughness: 2D+1 (65 tons, 32,500 cr)
Atmosphere Capability: streamlining (17 tons, 6,500 cr), landing gear (13 tons, 4,875 cr)
Armor: 0
Shields: +2D+1 (4 areas, 7 tons, 7 eu, 63,000 credits)
Total Tonnage: 181
Scale: 17 **Total Area Units:** 76
Length: 38 meters (cylinder), 26 meters (ellipsoid), 19 meters (wedge)
Total Cost (new): 249,105 credits/*Price Difficulty*: 45

Shuttlecraft

Used for short jaunts between planets and space stations and other orbiting vessels, shuttlecraft can transport people and cargo safely, even if not comfortably. This is the most common type used as an auxiliary ship on board large naval vessels as well.

Crew: 2 **Passengers:** 8
Life-Supporting Modules
standard bridge (2 stations, 8 areas, 4 tons, 0.8, 200 cr) with +1 *gunnery*, +2 *sensors*, and +2 *comm* upgrades (2 eu, 1,500 cr); passenger area with seating for 8 (10 areas, 5 tons, 1 eu, 500 cr) with snack processor upgrade
Cargo Modules
bulk (10 areas, 10 tons, 1 eu, 250 cr)
Life-Support Supplies: food storage (2 areas, 0.5 tons, 0.5 eu, 10 cr); snack food supply (10 people/1 month, 0.1 tons, 60 cr); atmosphere (13 person-areas/1 month, 1,300 cr)
Weapons
1 blaster cannon (1 area, 2 tons, 11 eu, 8,000 cr, forward arc, range 8/25/38, damage 3D)
In-System Drive (9 areas, 9 tons, 21 eu, 13,000 cr)
Move: 7 (space), 350 (atmosphere, 1,000 kph)
Maneuverability: 0
Interstellar Drive: None
Total Energy Requirements: 38

Strike Fighter

These ships represent two different versions of a hard-hitting strike fighter used primarily for offense rather than defense. The first has moderate weapons and no atmospheric capabilities, while the second, though slower, has interstellar capabilities, totes bigger guns, and can swoop down to planets.

Erda Class

Crew: 1 **Passengers:** 0
Life-Supporting Modules
compact bridge (2 areas, 1 ton, 0.2 eu, 75 credits) with +1D *piloting* and *gunnery* upgrades (2 eu, 1,800 cr) with pilot autofunction program (15 eu, 8,000 cr, 3D each in *piloting* and *gunnery*) and luxury upgrades of converting bridge to cryogenic chamber (125 cr) and ship indentifier (1,000 cr)
Cargo Modules
bulk space (1 area, 1 ton, 0.1 eu, 25 cr)
Life-Support Supplies: food storage (1 area, 0.5 tons, 0.5 eu, 10 cr); standard food (1 person/1 month, 0.1 tons, 100 cr); atmosphere (1 person/1 month, 100 cr)

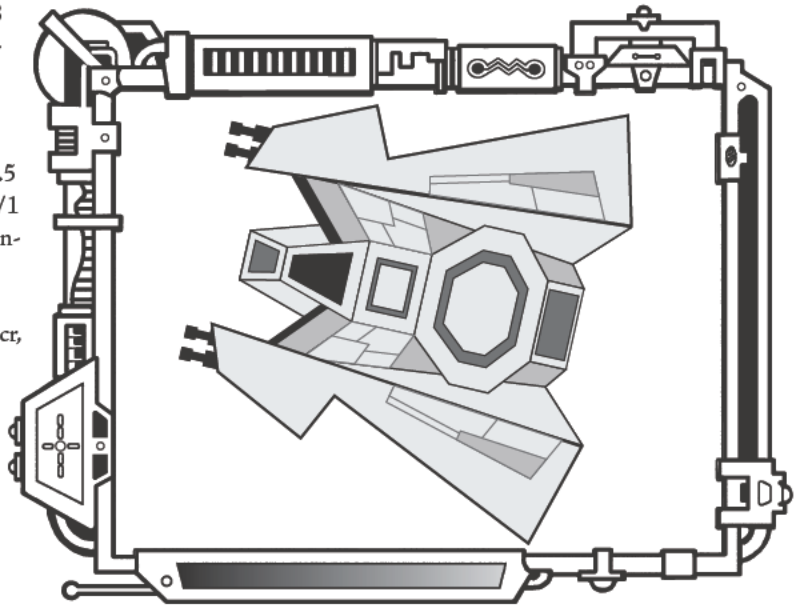

Accessing: D6 Space Ships File 4
Notes: Fluffy needs a lot of attention.

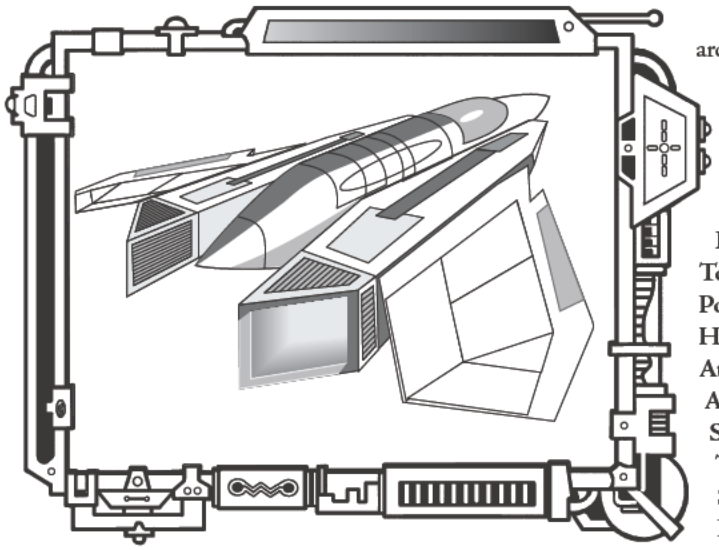

Weapons

4 laser cannons (12 areas, 16 tons, 28 eu, 36,000 cr, forward arc, range 3/12/25, damage 4D), fire-linked (+8 damage bonus, 400 cr)

2 torpedo launchers (4 areas, 6 tons, 4 eu, 10,000 cr, forward arc, ammo 1 each, range 2/3/7, damage 9D)

In-System Drive (10 areas, 10 tons, 24 eu, 8,500 cr)

Move: 8 (space), 400 (atmosphere, 1,150 kph)

Maneuverability: +3D (18 eu, 5,400 cr)

Interstellar Drive: 1.0 (12 areas, 36 tons, 100 eu, 51,000 cr)

Total Energy Requirements: 195

Power Plant: 235 energy units generated (17 areas, 31 tons, 35,500 cr)

Hull Toughness: 2D+1 (61 tons, 30,500 cr)

Atmosphere Capability: streamlining (16 tons, 6,100 cr), landing gear (13 tons, 4,575 cr)

Armor: +1D+2 (30 tons, 30,000 cr)

Shields: +1D (2 areas, 3 tons, 3 eu, 27,000 cr)

Total Tonnage: 245 tons

Scale: 17 **Total Area Units:** 61

Length: 32 meters (cylinder), 21 meters (ellipsoid), 16 meters (wedge)

Total Cost (new): 256,210 credits/*Price Difficulty:* 46

Himmel Class

Crew: 1

Passengers: 0

Life-Supporting Modules

compact bridge (2 areas, 1 tons, 0.2 eu, 100 cr) with +1D *gunnery, piloting,* and *sensors* upgrades (3 eu, 2,700 cr)

Cargo Modules: None

Life-Support Supplies: atmosphere (1 person/1 month, 100 cr)

Weapons

2 blaster cannons (6 areas, 8 tons, 26 eu, 20,000 cr, forward arc, range 6/15/24, damage 5D each)

1 missile launcher (2 areas, 3 tons, 2 eu, 3,000 cr, forward arc, ammo 1, range 2/3/7, damage per missile)

4 passive homing (2,000 cr, damage 6D each) in 4 ammo bays (4 areas, 8 tons, 1.6 eu, 400 cr)

In-System Drive (12 areas, 12 tons, 30 eu, 10,500 cr)

Move: 10 (space)

Maneuverability: +2D (12 eu, 3,600 cr)

Interstellar Drive: None

Total Energy Requirements: 88

Power Plant: 130 (10 areas, 17 tons, 21,500 cr)

Hull Toughness: 1D+2 (30 tons, 15,000 cr)

Atmosphere Capability: None

Armor: 0

Shields: +4D (3 areas, 5 tons, 12 eu, 45,000 cr)

Total Tonnage: 84

Scale: 15 **Total Area Units:** 39

Length: 20 meters (cylinder), 14 meters (ellipsoid), 7 meters (spheroid), 10 meters (wedge)

Total Cost (new): 99,775 credits/*Price Difficulty:* 30

Three-Factor Ships

Military Carrier

The carrier is a huge military vessel used to ferry sublight fighters via interstellar travel and to launch them into combat. The carrier's flight compliment includes six squadrons of six fighters each. The carrier usually also holds four shuttlecraft for administrative duties or ship-to-shore travel (as carriers are too huge to operate within the atmosphere of a planet). Most carriers are not as heavily armed as their massive size would imply, instead devoting more space to hangar and launch facilities and entrusting their defense to the fighters they carry, as well as to the escort vessels that usually accompany the carrier in fleet operations.

Crew: 114 **Passengers:** 4

Life-Supporting Modules

2 airlocks (4 tons, 0.8 eu, 600 cr), bridge (7 stations, 14 tons, 2.8 eu, 700 cr) with +2D *comm, gunnery, navigation, piloting, sensors,* and *shields* upgrades (12 eu, 10,800 cr) and ship identi-

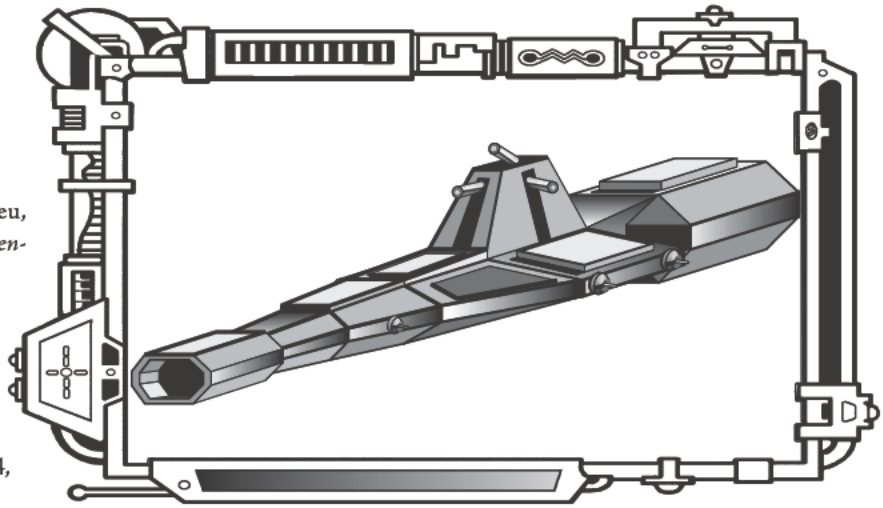

fier upgrade (1,000 cr); 2 ship engineering duty stations (4 tons, 0.8 eu, 200 cr) each with +1D *flight systems repair* upgrade (2 eu, 1,800 cr); computer engineering station (2 tons, 0.4 eu, 100 cr) with +1D *computer interface/repair* upgrade (1 eu, 900 cr); 12 gunnery duty stations (located with weapons, 28 eu, 25,200 cr) each with +2D *gunnery* upgrade (24 eu, 21,600 cr); brig (8 tons, 1.6 eu, 2,000 cr); 24 bunks (240 tons, 48 eu, 21,600 cr); hydroponics (10 tons, 2 eu, 2,000 cr); infirmary (54 tons, 10.8 eu, 9,000 cr) with +2D *medicine* upgrade (2 eu, 1,800 cr); leisure room (120 tons, 24 eu, 12,000 cr); mess lounge (120 tons, 24 eu, 12,000 cr) with 5 food processor upgrades (125 cr); 4 one-person rooms (20 tons, 4 eu, 2,000 cr); 9 two-person rooms (63 tons, 12.6 eu, 6,300 cr); 2 workrooms (laundry and kitchen, 8 tons, 1.6 eu, 6,000 cr); hallways (corridors, access tubes, and lifts, 159 tons, 31.8 eu, 7,950 cr)

Cargo Modules

bulk (50 tons, 5 eu, 1,250 cr); hangars (1 for 36 fighters, 1 for 4 shuttles, 4,752 tons, 475.2 eu, 704,000 cr) with +1D *flight systems repair*, *gunnery repair*, and *armor repair* upgrades (3 eu, 2,700 cr); launch bay (launch 6 ships or 3 shuttles, 288 tons, 57.6 eu, 84,000 cr); 118 escape pod bays (236 tons, 47.2 eu, 129,800 cr)

Life-Support Supplies: food storage (35.5 tons, 35.5 eu, 710 cr); standard food (118 people/3 months, 35.4 tons, 335,400 cr); atmosphere (1,454 person-areas/3 months, 436,200 cr)

Weapons

6 laser cannons (18 tons, 72 eu, 96,000 cr, one each arc, range 5/16/33, damage 6D each)

6 point-defense guns (12 tons, 12 eu, 24,000 cr, 3 port arc, 3 starboard arc, range 1/2/3, damage 5D each) with 2 sets of 3 guns fire-linked (+22 damage bonus each set, 600 cr)

2 sensor probe launchers (6 tons, 4 eu, 20,000 cr, 1 port arc, 1 starboard arc, ammo 1 each, range 2/3/7, damage 9D each) with 20 replacement sensor probes (200,000 cr) in 20 ammo bays (40 tons, 4 eu, 2,000 cr)

2 torpedo launchers (6 tons, 4 eu, 10,000 cr, 1 port arc, 1 starboard arc, ammo 1 each, range 2/3/7, damage 9D each) with 20 replacement torpedoes (20,000 cr) in 20 ammo bays (40 tons, 4 eu, 2,000 cr)

In-System Drive (9 tons, 21 eu, 7,500 cr)
Move: 7 (space)
Maneuverability: 0

Interstellar Drive: 1.0 (36 tons, 100 eu, 51,000 cr); *backup:* 0.1 (9 tons, 10 eu, 6,000 cr)

Total Energy Requirements: 1,061

Power Plant: 1105 energy units generated (147 tons, 148,500 cr)

Hull Toughness: 4D+1 (3,927 tons, 1,963,500 cr)

Atmosphere Capability: None

Armor: 0

Shields: +3D (338 tons, 9 eu, 3,375,000 cr)

Total Tonnage: 10,825

Scale: 26

Total Area Units: 5,413

Length (6 meters tall): 1,354 meters (cylinder), 903 meters (ellipsoid), 677 meters (wedge)

Total Cost (new): 7,339,985 credits/*Price Difficulty*: 240

Pirate Corsair

Pirate vessels come in all shapes and sizes. This example is fairly typical, being a refitted cargo vessel with much of the portage space being used for additional weapons and shields. Many of the components come from several black-market sources, making the typical pirate ship look like a ragtag collection of parts welded together.

Crew: 2 **Passengers:** 6

Life-Supporting Modules

group airlock (2 tons, 300 cr); bridge (4 stations, 8 tons, 1.6 eu, 400 cr) with +1D *navigation*, *sensors*, and *shields* and +3D *gunnery* upgrades (6 eu, 5,400 cr) and pilot autofunction program (15 eu, 8,000 cr, 3D each in *piloting* and *gunnery*); 2 weapons duty stations (with cannons, 2 tons, 0.4 eu, 150 cr) with +3D *gunnery* upgrade each (6 eu, 5400 cr); combined leisure room and lounge (24 areas, 4.8 eu, 2,800 cr); medical bed (1.5 tons, 0.3 eu, 400 cr) with +1D *medicine* upgrade (1 eu, 900 cr); 8 one-persons room (20 areas, 10 tons, 1000 cr); hallways to connect rooms (44 tons, 8.8 eu, 2,200 cr)

Cargo Modules

bulk (equipment and weapons lockers plus cargo area; 100 tons, 210 eu, ,500 cr); 8 escape pod bays (16 tons, 3.2 eu, 8,800 cr)

Life-Support Supplies: food storage (2 tons, 2 eu, 40 cr); standard food (8 people/2 months, 1.6 tons, 1,600 cr); atmosphere (44 person-areas/2 months, 8,800 cr)

Weapons

2 laser cannons (8 tons, 22 eu, 28,000 cr, five arcs each, range 3/12/25, damage 6D each)

2 missile launchers (6 tons, 4 eu, 6,000 cr, forward arc, ammo 1 each, range 2/3/7, damage per missile)

4 passive homing (2,000 cr, damage 6D each) in 4 ammo bays (4 areas, 8 tons, 1.6 eu, 400 cr)

In-System Drive (10 tons, 24 eu, 8,500 cr)
Move: 8 (space), 400 (atmosphere, 1,150 kph)
Maneuverability: +2D (12 eu, 3,600)

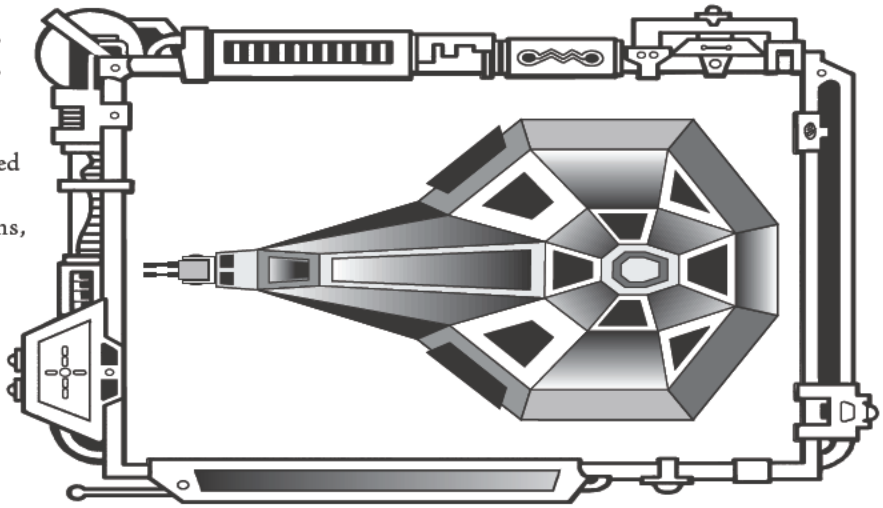

Interstellar Drive: 2.0 (60 tons, 200 eu, 101,000 cr); *backup*: 0.1 (9 tons, 10 eu, 6,000 cr)
Total Energy Requirements: 340
Power Plant: 385 energy units generated (27 tons, 36,500 cr)
Hull Toughness: 3D (232 tons, 116,000 cr)
Atmosphere Capability: streamlining (58 tons, 23,200 cr), landing gear (47 tons, 17,400 cr)
Armor: +3D (135 tons, 135,000 cr)
Shields: +3D (21 tons, 9 eu, 202,500 cr)
Total Tonnage: 879
Scale: 20 **Total Area Units:** 440
Length: 220 meters (cylinder), 147 meters (ellipsoid), 110 meters (wedge)
Total Cost (new): 720,415 credits/*Price Difficulty*: 92

Freeform Design System

The game characteristics for these vessels are reduced from that required by the full design system. As these vessels are more gamemaster's characters than something the players control, that works fine. Plus, they give examples of ships made with the freeform method.

Blockade Runner

A sturdy warship that sees a lot of combat, the blockade runner is the place to be for those who want to get plenty of action.

Crew: 565 (pilots, navigation, gunners, sensors, communication, repair, administration, and support staff)
Passengers: 100
Cargo: 3,000 cubic meters, including equipment, storage, supplies, and escape pods
Life-Support Supplies: 1 year
Weapons
6 laser cannons (3 forward arc, 1 starboard arc, 1 port arc, 1 rear arc, *gunnery* bonus +3D, range 15/36/73, damage 4D)
1 sensor probe launchers (1 forward arc, range 2/16/14)
In-System Drive
Move: 6 (space); 300 (atmosphere, 850 kph)
Maneuverability: +2D

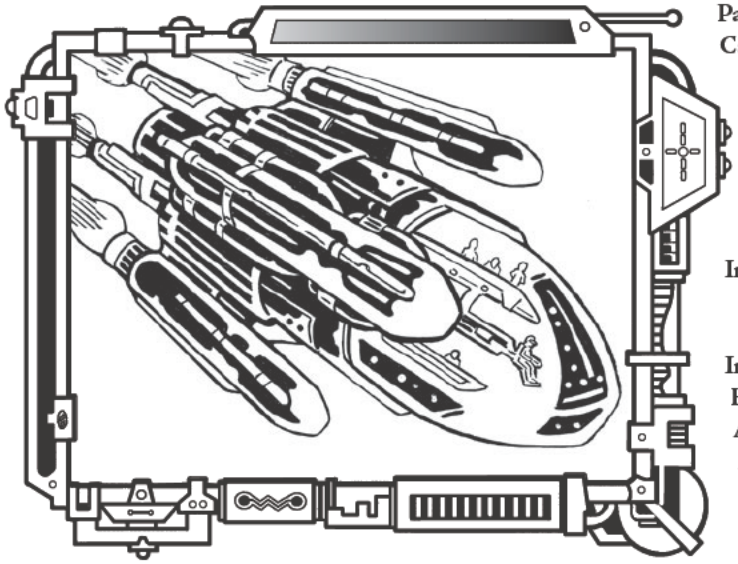

Ship Weaknesses _

Many ships, especially those bought (or stolen) used or large ones designed with the freeform method, have flaws. Damaging the power plant may cause the weapons to overload and explode. One vital part might not be as heavily armored as the rest of the ship. Concentrating fire on a seemingly meaningless opening may trigger the self-destruct sequence. Or the gamemaster might come up with another weakness.

Once the gamemaster decides what it is, he should set the difficulty to figure it out; the difficulty to hit it (including the scale value), if it's outside the ship; and the amount of damage that needs to be done to it to cause the ship's destruction.

Interstellar Drive Rating: 2.0; *backup*: 0.1
Hull Toughness: 4D
Atmosphere Capability: Yes
Armor: +1D
Shields: +1D
Scale: 26
Length (approximate): 150 meters (can be of any shape except spheroid)
Total Cost (new): 3,000,000/*Price Difficulty*: 320

Galaxy's Wings

An interstellar cruise ship and transport vessel, the *Galaxy's Wings* offers a means of getting around the universe without purchasing an entire ship. The vessel is one of many in its corporation's fleet. It offers numerous amenities, such as exercise and sports rooms, theaters, shopping, restaurants, and more. It has a strict schedule and visits only the most popular planets. This is partly for safety (it has minimal armaments and thus sticks to patrolled space) and partly for economic reasons.

Crew: 17,100 (pilots, navigation, gunners, sensors, communication, repair, administration, support staff, and guest service staff)
Passengers: 1,000
Cargo: 11,000 cubic meters, including equipment, storage, supplies, and escape pods
Life-Support Supplies: 1 year
Weapons
25 laser cannons (5 forward arc, 5 starboard arc, 5 port arc, 5 upper arc, 5 lower arc, *gunnery* bonus +1D, range 15/36/73, damage 5D)
In-System Drive
Move: 4 (space)
Maneuverability: 0
Interstellar Drive Rating: 1.2; *backup*: 0.1
Hull Toughness: 4D
Atmosphere Capability: None
Armor: +1D
Shields: +1D
Scale: 34

Length (approximate): 600 meters (can be of any shape desired, but includes many decks)
Total Cost (new): 80,000,000 credits/*Price Difficulty:* 8020

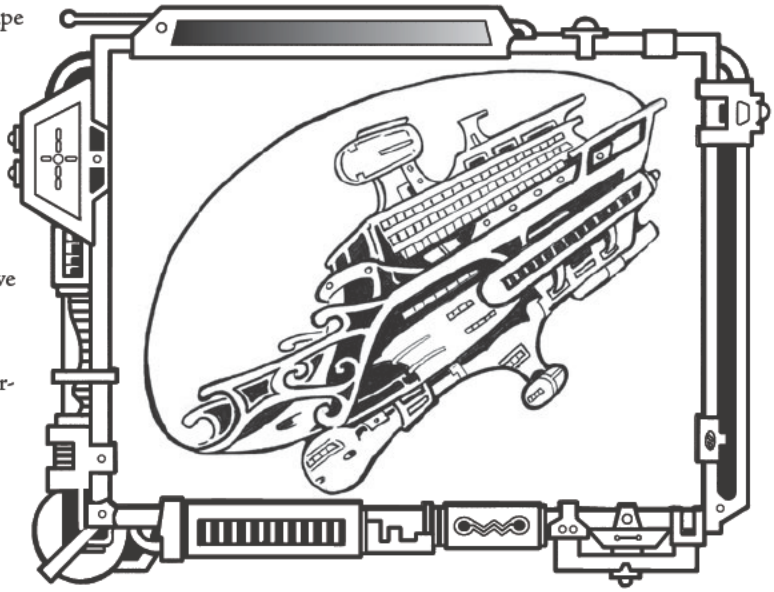

Stock Freighter

For those who aren't into a customized model, this generic freighter can haul them around the galaxy without much trouble. Assuming the ship didn't have any quirks when it was won in a poker tournament.

Crew: 4 **Passengers:** 8
Cargo: 135 cubic meters, including equipment, storage, and supplies
Life-Support Supplies: 5 months
In-System Drive
Move: 3 (space); 150 (atmosphere, 430 kph)
Maneuverability: +1D
Interstellar Drive Rating: 1.7; *backup:* 0.1
Weapons:
1 blaster cannon (forward arc, *gunnery* bonus +1D, range 3/12/25, damage 4D)
Hull Toughness: 3D
Atmosphere Capability: Yes
Armor: +1D
Shields: 0
Scale: 18
Length (approximate): 35 meters (can be of any shape desired, but includes many decks)
Total Cost (new): 90,000/*Price Difficulty:* 29

Zeus Machina

This warship is intended to serve as a background feature or plot device. It has one or two weaknesses, which the gamemaster selects and reveals at the appropriate time.

Crew: 36,000 (pilots, navigation, gunners, sensors, communication, repair, administration, and support staff)
Passengers: 9,000 (troops)
Cargo: 175,000 cubic meters, including equipment, storage, supplies, ground assault craft, shuttles, gunboats, and five squadrons of light fighters
Life-Support Supplies: 5 years
Weapons:
55 laser cannons (10 forward arc, 15 starboard arc, 15 port arc, 5 rear arc, 5 upper arc, 5 lower arc, *gunnery* bonus +4D, range 15/36/73, damage 5D)
15 sensor probe launchers (5 forward arc, 5 starboard arc, 5 port arc, *gunnery* bonus +2D, range 2/16/14)
8 tractor beams (4 forward arc, 2 starboard arc, 2 port arc, *gunnery* bonus +2D, range 5/15/30, damage 6D)
In-System Drive
Move: 6 (space)
Maneuverability: +1D
Interstellar Drive Rating: 2.0; *backup:* 0.2
Hull Toughness: 6D
Atmosphere Capability: None
Armor: +1D
Shields: +3D
Scale: 36
Length (approximate): 1,500 meters (can be of any shape desired, but includes many decks)
Total Cost (new): 500,000,000//*Price Difficulty:* 50020

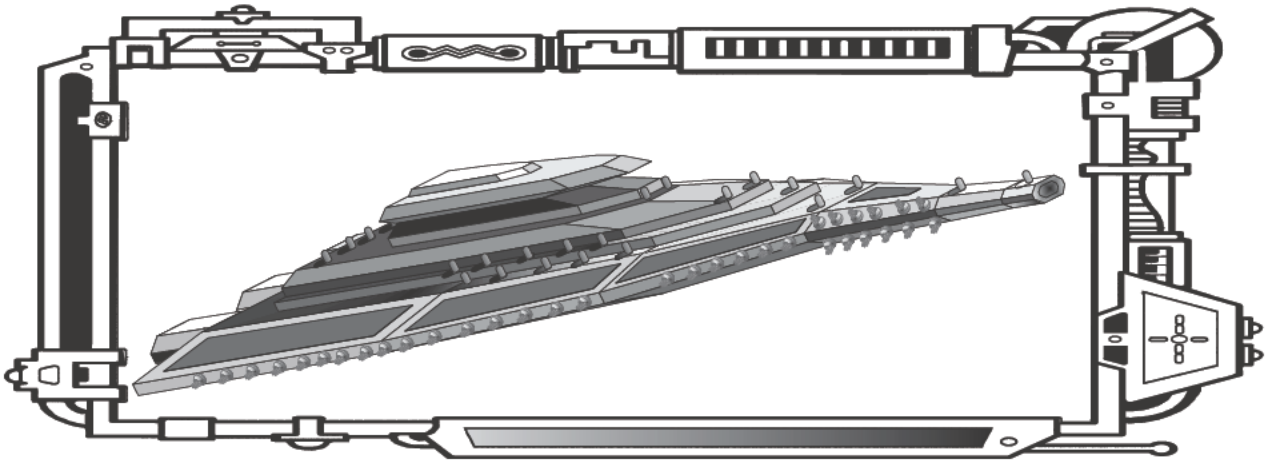

Adventures in Space _

What's in this Chapter

Space is a realm of literally infinite dimensions, with limitless potential for variety in encounters. Elements from any genre can be incorporated into a space-based campaign with only a little work. Characters traveling the galaxy in their own starship can be explorers, scholars, warriors, criminals, law enforcers, or any other of a hundred different roles that have been portrayed in film, fiction, and adventure gaming for decades.

This chapter offers a toolkit for gamemasters to create adventures revolving around the possession of and operation of a starship, the ultimate piece of equipment for characters in an interstellar campaign. Themes, plots, and encounters,, including alien encounters, natural phenomenon, navigational hazards, criminal enterprises, and others, are examined. Players are also encouraged to look through the chapter, to get background and goal ideas for their characters and to get ideas about the kinds of adventures they'd like to experience.

Basic Story Aspects

Theme

The first and most important step in creating an encounter for a space campaign is to determine the theme. Generally speaking, an encounter's theme should be compatible with the overall theme of the campaign. Exceptions should be relatively rare in order to preserve both the cumulative atmosphere that must be gradually developed in any campaign, as well as the more immediate plans for the impending encounter. Repeatedly changing the mood and ambiance of a campaign can diminish the enjoyment for everyone involved. With that in mind, here are three common themes and how they interact with one another.

Exploration: Exploration is perhaps the quintessential theme of the space genre. A lone starship, traveling into deep space, encountering places, creatures, and phenomenon no other being has yet discovered is the perfect representation of a space campaign. There is literally no limit to the types of encounters such a campaign can contain, given its inherently varied nature. It's simple to introduce encounters of other themes into such a campaign, as conflict is a universal truth that can be encountered in the uncharted wilds of space just as easily as in the galaxy's politic-ridden heart. Conflict should be used cautiously, however, as such encounters can damage the sense of wonder and discovery that are the linchpins of an exploration campaign. Independence as a theme goes hand in hand with exploration, for few explorers are not self-reliant, freedom-loving wanderers at heart.

Conflict: A theme of conflict can take any number of forms ranging from the dark and sinister experiences of blood-thirsty pirates to that of a just, noble cause being carried out by loyal, valiant warriors. Starships make excellent resources for such encounters, as they can be tailored to suit the needs of fighters perfectly, employing defense, offense, and mobility in whatever capacity is required. Exploration-themed adventures can be at odds with a conflict-based campaign, although they can serve to instill a sense of wonder in an otherwise bleak campaign, allowing jaded warriors to reconsider their chosen lifestyle or reminding noble soldiers of the reason for their righteous campaign.

Independence: The theme of independence is an integral part of many common spacer archetypes. Smugglers, privateers, free traders, and even law enforcement personnel traverse the galaxy in search of true independence. The starship is the ideal vessel for such character, permitting them to go anywhere for any reason. Encounters with exploration themes work well in an independence campaign, allowing characters to enjoy the fruits of their self-reliance. Conflict as a theme should be used less frequently, unless as a struggle for the characters to maintain their independence. Occasional forays into an interplanetary war during the course of an adventure can demonstrate to the characters exactly why they have chosen the lifestyle they embrace.

Plot

With a theme selected, the gamemaster now determines the plot of the adventure. In the 1920s, an author named Georges Polti published a book entitled *The Thirty-Six Dramatic Situations*, in which he theorized that every story could be grouped into one of a number of possible plots. Not all of these plots are of use in a space encounter, obviously, but there are several that can be broadly incorporated into an appropriate encounter. Each plot in this list of examples includes the broad category followed by a list of the major participants or factors and then an explanation of the plot.

Supplication (factors: persecutor, suppliant, a power in authority): A supplication is a request for aid made by someone suffering persecution. Genre favorites along this line include the request to an old general to come out of retirement to aid a persecuted group under the heel of some petty tyrant, the hiring of freelance starship crews by the citizens of some backwater planet to protect them from a pirate fleet, or the request of a

dying stranger to deliver a package of some sort to a distant world or individual.

Daring Enterprise (factors: bold leader, goal, adversary): A daring enterprise can describe almost any act or mission undertaken by a starship crew. Rescuing a prisoner from a distant asteroid prison encampment, delivering a cargo through an impenetrable blockade, or hunting a lost artifact through the drifting ruins of a destroyed planet all fall into this category. In any such enterprise, the crew's skill and bravado take center stage, but the starship provides the tools with which to complete the task.

Erroneous Judgment (factors: mistaken one, victim of mistake, author of mistake, guilty person): Any character can be accused of acts he hasn't committed, and it's a simple matter to incorporate an existing nemesis of some sort as the author of this mistake. Perhaps the crew's vessel has been identified as containing illegal cargo, or perhaps it has been targeted by law enforcement as having been used in the commission of a crime. In either case, the ship becomes the focus for an unpleasant conflict that can be resolved in a wide number of ways depending on the inclinations of the crew and their hopes for the campaign's future.

Loss of Loved Ones (factors: person slain, witness, executioner): This plot is easy to incorporate into a starship-based campaign: use the destruction of the crew's ship to spiral them into a completely unexpected encounter with existing enemies, new enemies, or a third party responsible for the destruction (perhaps completely by mistake).

Types of Encounters

Once the gamemaster, with input from the players, selects the theme and plot, it's time to flesh it out into an adventure. This section examines several broad types of encounters that an adventure could contain. In each case, options for using that particular type of encounter are discussed, and short encounter ideas are provided in each section. These ideas are intended as simple capsules to spark the imagination and provide material for developing stellar adventures.

Alien Encounters

The notion of an encounter with aliens is probably them most tantalizing possibility for players and gamemasters alike when participating in a space-based campaign. It's the defining element of the genre, the quintessential experience for every player who dreams of flying among the stars in a craft capable of faster than light travel. Though there are of course exceptions, it's safe to say that most space-based campaigns will experience an alien encounter at some point during their tenure.

By definition, an alien encounter involves something unfamiliar or unknown to the characters involved. While this can take many forms, new beings (possibly intelligent and wielding incredible and fantastic technology) are the most typical manifestation. There have been countless works of fiction based around this simple premise, and it's an easy concept to use as an adventure idea for any space-based game. Other variations on this idea include encounters with some sort of artifact left behind by an alien race, or with events set into motion through the action or lack thereof by aliens and their civilization.

Creating Atmosphere _

As with so many elements of a successful space campaign, careful planning and a bit of creative thinking can work wonders in creating the proper atmosphere and enhancing the gaming experience for everyone.

Music: Music is the most accessible and possibly the most effective means of establishing a proper atmosphere. There are a number of motion picture soundtracks available that are practically icons of the genre, and they can evince particularly specific images and emotions. Some preparation prior to the encounter can let the gamemaster queue up certain pieces of music for certain scenes.

Movies: Watching a portion of a movie or series that involves similar events to an encounter can inspire players, but can also bring about accusations of unoriginality if overused. Generally, this technique works best by using only portions of a movie that contain no dialogue or recognizable characters, but focus instead on background, setting, or just a little bit of "eye candy."

Maps: For situations occurring within a starship's interior, a map can be invaluable in speeding up any combat encounters and answering players' questions about where rooms are located. For intense, suspenseful combat scenes wherein the characters are searching for an unknown foe, gamemasters may consider covering portions of the map that the characters don't know about, adding an element of mystery to the affair.

Likewise, a map can simplify matters for ship-to-ship combat. A simple two-dimensional map can offer a basic idea of where each vessel is in relation to others. Using stands of variable heights can improve the experience by simulating the three-dimensional nature of space.

Food: Although not as effective as other genres, it still may be possible to set the mood for a space encounter with food. Various freeze-dried foods are commercially available, and they are an excellent representation of the type of rations some crews might have to make do on for weeks or even months at a time between planetary visits.

Alien Life Forms

Alien life forms are the most intriguing form of encounter, perhaps because of our own inherent fascination with those things that are new and different from our existing body of knowledge. An intelligent foe is the most bracing challenge a character can face, and introducing one whose mannerisms, motivations, and abilities are completely unknown only complicates the matter further. Likewise, making an ally out of an unknown quantity is an achievement that can distinguish a character from the pack, giving them a unique resource to draw upon.

Alien Starships

The simplest means of encountering alien life forms while traveling through space is to meet them in ships of their own. Communication is the first and most pressing obstacle characters

Alien Explorer _

Agility 2D+2, dodge 3D, firearms 3D, Strength 2D+2, Mechanical 3D, navigation 5D, piloting 4D+2, Knowledge 3D+2, aliens 4D, cultures 4D, survival 4D, Perception 3D, know-how 3D+2, Technical 3D, flight system repair 4D. *Move:* 10. *Strength Damage:* 1D. *Body Points:* 12/*Wound levels:* 2. *Equipment:* exploration vessel; advanced sensor kit (+1D to *search* and *survival*); laser pistol (damage 4D); heavy environmental suit (Armor Value +2).

must overcome when interacting with a new race. The technology necessary for interstellar travel is truly impressive, but it does not mean a flawless communication between different species. Depending on the setting, computers capable of interpreting and translating thousands or even millions of different languages can and do exist, but many are too large or too expensive to be found on the average privately owned starship. In other games, understanding other species may be commonplace.

Once communication has been achieved, things may or may not progress smoothly.

The encounter could be resolved peaceably and diplomatically, establishing first contact between whatever group the characters represent and the new alien civilization. It also could serve as comic relief as a group of seasoned deep-spacers attempt to play the diplomats to a noble entity whose customs are an utter mystery.

It's equally simple for a first-contact encounter to rapidly turn to violence. Perhaps the characters' ship inadvertently strays into a high-security region of some alien military organization, or into a system that's hotly contested by two separate alien races. In either case, the aliens will respond quickly to the appearance of any unknown ship (such as that possessed by the characters) with violence — and a warning first, if the characters are lucky. Even if the characters can comprehending alien languages, the best they can hope for is to be quickly boarded and interrogated. This could lead to any number of interesting scenarios, perhaps even one wherein the characters must escape from an alien prison ship.

Alien starships can be incorporated into encounters that do not involve direct interaction. The characters may become aware that such a ship is in the area but be unable to locate it for whatever reason, perhaps because it has more advanced technology. This can have an effect on whatever other activities are taking place with regard to the characters' mission. If the party is in the system on a survey mission, for example, the alien vessel's cloaking field could be dramatically altering the results of their scans or even their navigational systems, making it difficult or impossible to complete the mission or leave the area until the matter is resolved.

Another potential encounter type, one that involves the characters' ship tangentially, is a reversal of a common theme in science fiction film and stories: reconnaissance and experimentation. As a military or scientific endeavor, the characters and their vessel could be hired, forced, or conscripted to make early contact with an alien civilization via espionage or abduction. This would allow the players to experience the opposite side of a traditional genre convention and raise interesting ethical questions for the characters to deal with in the process.

Another interesting encounter with aliens might be with primitive beings that have been taken into space against their will, usually as slaves. Characters who defeat an attacking vessel or who track down slavers for some reason (perhaps they are law enforcement officials) could encounter such primitive beings who might regard the characters as saviors, perpetrators, or even deities. The characters could be saddled with these unwanted passengers until such time as they could find somewhere else for them to go or locate their home planet, a difficult prospect at best unless they've found a means of communicating with the former slaves.

Space-Dwelling Organisms

Perhaps the most alien form of life that can be imagined is that which exists in the cold, airless vacuum of space. Such beings are often more similar to the metals and plastics that make up a ship's substance than that of the crew piloting it. Obviously, this type of life form is exceedingly rare, as space is the most inhospitable environment known to exist. The pressureless vacuum, the unfiltered solar radiation, and the constant peril of impact from countless drifting items of debris does not create an environment conducive to evolution. Nevertheless, under the rarest of circumstances, that's exactly what occurs.

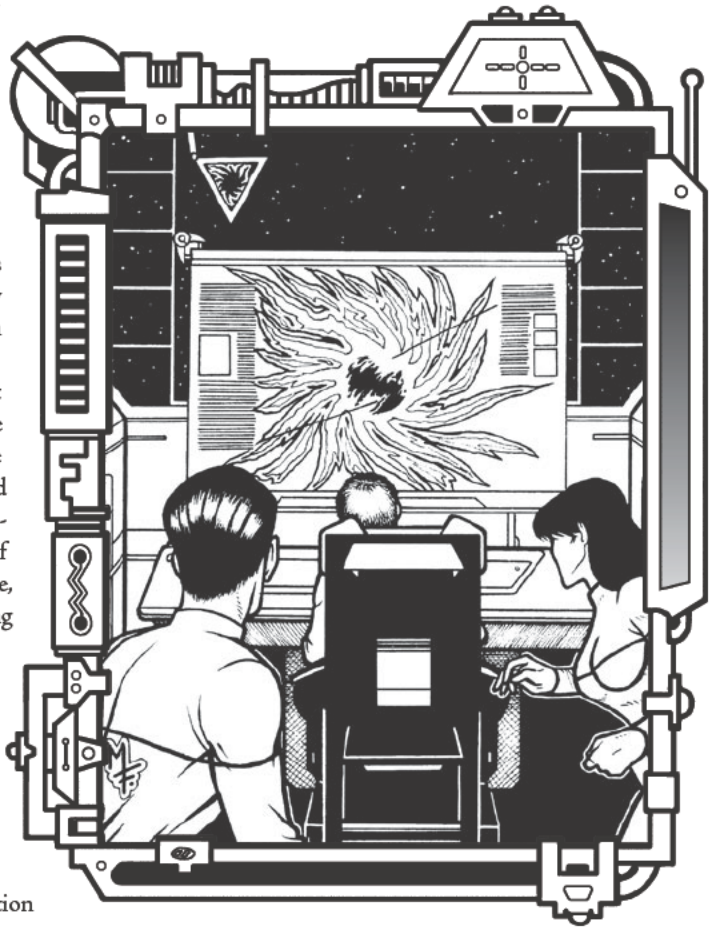

Space-borne organisms are typically primitive creatures operating on instinct and little else. Survival is all that can be expected in space; the development of language or culture is nearly impossible. In most cases, these organisms are similar to those that might develop deep in the ocean, or to microscopic organisms.

Characters intent on investigating the mining possibilities in a vast asteroid belt might find their plans altered considerably if they discover that same belt is the spawning ground of a vast herd of titanic space creatures similar to drifting jellyfish. And what if the characters' favorite shipping route becomes infested with millions of strange, fish-like creatures intent on feeding on the energy particles left in the wake of starships exactly like those the characters pilot?

Space-borne life forms should be used sparingly in a campaign unless they are its focus. The sense of wonder that such organisms create can easily be lost if overused, diminishing the appeal of the concept in the first place. The key element of any encounter involving them is to maintain an alien atmosphere. Beings such as these should remain mysterious, foreign, and ultimately unknowable to the characters.

Parasites and Infiltrators

There is no more insidious threat than that which threatens the characters' starship. The ship is more than just the party's home; it's the source of everything that sustains them during their travels. If the ship is damaged, disabled, or infiltrated, their life is in serious jeopardy from asphyxiation, starvation, or a violent, unexpected death.

In space, a starship is the only immediate source of electrical energy. Electricity is a basic form of energy that many creatures, particularly those born in the depths of space, can metabolize and use to survive. Creatures like these might view a passing starship as little more than a traveling restaurant, and they attack it like any predator would their prey. With the power cells drained, the ship would become a tomb for its crew, and the satiated creatures would continue on their way until the next meal became available. Many ships carry a shielded, secondary power cell to be used in the event of emergencies like this, but installing them can prove a lengthy and complicated process, adding another element of tension to such an encounter.

The slow dread a character can feel at the prospect of a lonely death from starvation or suffocation can create tremendous atmosphere for an encounter, but even more can be generated with another basic sensation: fear of being hunted. Introducing a creature onto a starship that the crew cannot identify but that's clearly both hostile and dangerous, can create an environment rife with potential for roleplaying. Countless films have captured this sense of panic and paranoia and can provide inspiration for reproducing it during an encounter.

Alien Infiltrator _

Agility 5D, brawling 6D+2, dodge 6D, running 5D+1, Strength 5D, climb/jump 5D+2, stamina 6D, Mechanical 1D, Knowledge 2D, Perception 4D, hide 5D, search 5D+2, sneak 6D, Technical 1D. *Move:* 10. *Strength Damage:* 3D. *Body Points:* 14/ *Wound levels:* 2. *Natural Abilities:* claws (damage +1D); natural camouflage (+2D to *hide* and *sneak*).

Alien Artifacts

There may be nothing more strange and mysterious than discovering a relic of an ancient alien race that has endured for ages. With objects constantly drifting through the literally infinite span between planets, stars, systems, and galaxies, it's possible for space-bound artifacts to be discovered millions of light-years away from their point of origin, leaving those who discover them with absolutely no means of learning about their true origins or purpose. This can be a frustrating experience, or it can be quite fulfilling if it's tailored to the interests and strengths of a well-rounded party.

See also "Artificial Hazards" later in this chapter for additional ideas.

Drifting Artifacts

A mysterious object is discovered floating in space — the very thought can stir the imaginations of many players. There is an almost limitless variety of such objects that can be introduced, allowing gamemasters to create as grand or as personal an experience for the characters as they choose.

Drifting artifacts need to be of at least comparable size to a starship, else they might never be noticed in the vast nothingness between planets. Manageable enigmas would necessarily be of a size that the characters can control. An alien vessel or space station adrift in space is something that an average party can take advantage of, either salvaging what they can from it or taking the ship to use as their own, assuming it's in condition to do so. An encounter like this can propel the characters into the spotlight as they use a previously unknown technology to make a name for themselves in their profession of choice. This can also lead to further encounters, as this technology will doubtless be coveted by rivals, criminals, and government officials alike.

Larger scale artifacts include space stations the size of planets or moons, giant rings that encircle entire planets, and colossal spheres built around a star to harness its energy. The existence of such an artifact could form the basis for an adventure or even an entire campaign. In the case of a sphere, a party of adventurers stranded on an artifact of that size could explore it for years, decades, or centuries and only discover a fraction of its surface. Likewise, characters could create a headquarters or temporary base from large-scale enigmas. (If they do this before they explore the neighborhood, they might be in for unpleasant surprises when they return from their forays into space.)

Taking a mundane object and adding even a single unique feature can dramatically alter the way that the characters perceive it. For example, a starship might be constructed from organic material rather than metal and plastic, or a space station could possess systems operated entirely through song.

Personal Artifacts

Out-of-the-ordinary artifacts of a more personal scale can be introduced into a campaign through any number of means, although salvaging them from a derelict ship can add another element of mystery to the adventure. Is the alien artifact the

driving force behind the not-so-alien ship's derelict status? Or was the ship destroyed because of the artifact, rather than by the artifact directly?

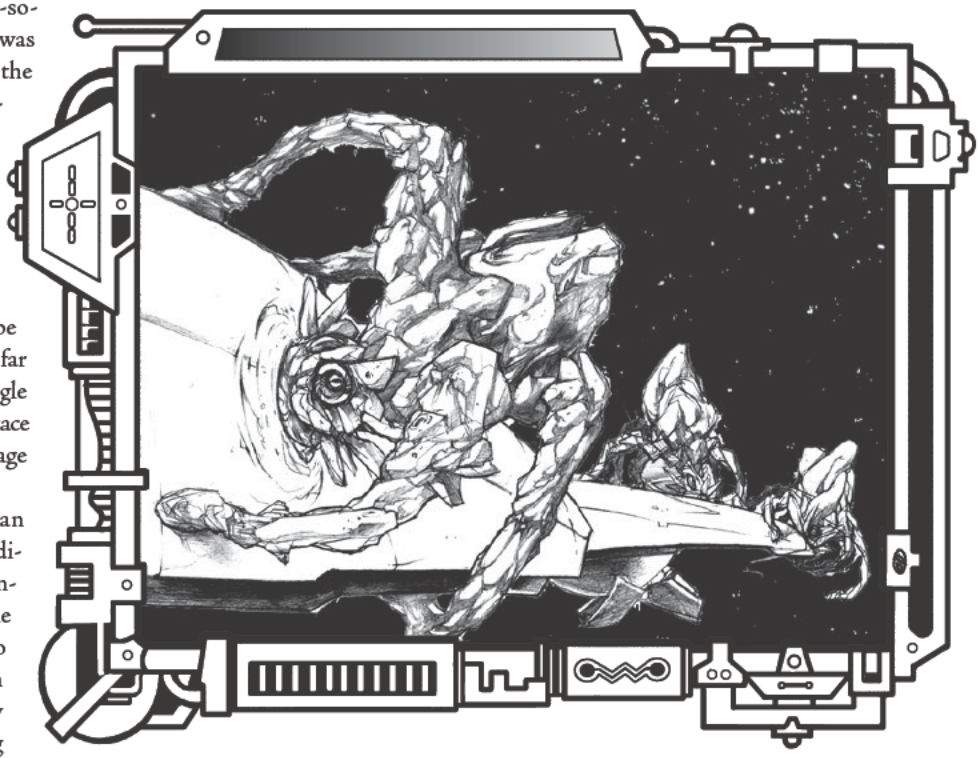

The effects of smaller scale artifacts can vary considerably. Players may not consider the notion of scale. An artifact the size of a normal laser rifle could actually be a vehicle for a race of beings far smaller than the norm — a single piece of nanotechnology from a race of beings larger than the average Human could comprehend.

Personal artifacts with an unknown function but immediately identifiable, seemingly beneficial effect can quickly become a fixture for characters who discover them. Allowing them to make use of them for lengthy periods of time before revealing their somewhat questionable (or in some cases downright sinister) origins or uses is an excellent way to ensure the characters have a personal investment in the adventure's outcome. A character that discovers her revolutionary new suit of alien body armor is actually an advanced sarcophagus designed to perfectly preserve a corpse placed within it might think twice about how she interacts with other unknown quantities in the future. If the sarcophagus seals after becoming attuned to its wearer, it could be a harrowing few days before her friends figure out how to get her out of it.

Remnants

Leftovers from an alien civilization do not need to be mysterious to have an impact. There are large number of possible encounters that are mundane but that have more than enough intrigue to capture the interest of a starship's crew. An abandoned mining facility built into an asteroid amid a belt is interesting, but if the characters' scans reveal absolutely nothing of any interest worth mining throughout the entire belt, curiosities might be piqued. No mining operation is so efficient as to remove a resource from a belt entirely, so the nature of whatever was being mined becomes a particularly valuable puzzle.

Another alien remnant that has served as a source for several popular fictions is that of bacteria or other microscopic organisms. Infection can be a terrifying foe, as there are no visible weapons that can be turned against it, and few starship crews have the skills necessary to combat a menace of this nature. Exposing a crew to an unknown but debilitating illness can send them into a frantic whirlwind of activity as they seek a means, any means, of combating the illness. Introducing such a threat can serve as a seemingly harmless beginning to an encounter that will end with a desperate race against time to save the lives of an entire crew while managing to avoid infecting anyone else. Perhaps the crew becomes tainted when exploring the drifting hulk of an ancient alien starship, or when delving into a forgotten ruin in deep inside a backwater planet. Regardless of the means of introduction, such a threat can become life-threatening almost immediately, or it may linger for a long period of time before finally coming to a point, allowing for a series of encounters based around the threat's manifestation.

Remnants of an alien civilization can be very simple in nature. The enigma comes from their abandonment. An alien starship found floating abandoned in space, with no sign of any damage and all systems fully operations, is a mystery itself, even if the technology used in the ship's construction is relatively mundane. An asteroid-mining facility becomes even more intriguing if it were somewhat primitive in nature, begging the question of how a race with such limited technology could create and oversee an asteroid-mining operation, much less what strange quantity they sought there.

Alien Legacies

Just as every planet has ancient civilizations that no longer exist, the galaxy is full of lost secrets every bit as engaging and involved as the artifacts described in the previous, but less tangible. These secrets can be extraordinarily valuable to the right parties, and a starship crew can make a fine living pursuing remnants of a lost age as their primary occupation. Governments, educational facilities, scholars and wealthy collectors all hire freelancers to assist in the reclamation of data lost to the eons. Although involving alien life only indirectly, these types of adventures can offer a substantial financial reward that can motivate even the most conservative spacer.

Alien legacy encounters depend heavily on a sense of the mysterious and the interaction with others. Fellow scholars,

Subdirectory > Deep Space Exploration _

As crewmembers aboard a deep space survey vessel, the heroes travel into unexplored territory, charting new worlds, safe jump routes, and astrographic hazards. They must make first contact with previously undiscovered alien species, analyze worlds for important resources, decipher the mysteries surrounding ancient artifacts, and continue delving into the farthest, darkest reaches of space with little or no support. The characters might have an agenda they must fulfill in a specified time: find a colony world for a dying planet, discover components to cure a devastating plague, or establish contact with new allies to aid against enemies back home.

Adversaries and Allies _

Exploring the unknown often pits the characters against a variety of challenges, each one quite different as the ship jumps from one system to the next. Recurring adversaries, however, help shape a consistent campaign, so gamemasters should develop some foe to regularly harass the heroes. Perhaps an alien empire is currently invading (or already rules) this region of space and enforces a strict prohibition against outsiders. Local warlords might try extending their influence against nearby worlds, especially with the characters' willing or unwilling assistance. A rival group of corporate- or government-sponsored explorers might seek to get rid of the heroes and exploit the area for their own interests. A sun nearing the supernova stage might threaten the entire region and all its inhabitants.

Since they're far from their home territory, the characters have few allies. Gamemasters might help the heroes along with occasional remote supply pods jettisoned in their direction, or maybe a small depot on the edge of known space they can use in emergencies. The deeper they go, however, the more self-sufficient the crew must become. In the course of their explorations, they might make allies who can offer them food, fuel, and repair facilities, so diplomacy is vital to their success.

Starships _

Since an exploration campaign centers on the survey craft, gamemasters should work with players to design a vessel that suits their needs. Do the heroes want a small ship where each character plays a vital role, or would they prefer to serve as the command crew aboard a capital ship? Venturing into the unknown requires the craft to possess adequate shields and weapons to deal with threats, plus specialized equipment to understand and analyze new findings: powerful sensor arrays, research computers, ground instruments and vehicles, science labs, probes, landing shuttles, and storage bays for samples.

The ship should have adequate facilities to maintain the crew for extended periods away from home, including living quarters, recreation facilities, gardens and hydroponics works, supply bays, and repair facilities. Deck plans can help determine what's onboard and what capabilities the ship possesses.

Support Locations _

Each scenario in an exploration campaign brings the heroes to some new world or astrographical feature. Unless characters establish some safe haven, few locations exist that can reliably support their starship.

A gamemaster's greatest challenge is creating different adventure settings. Each new planet encountered should have a different flavor: the ocean world; the planet with a primitive, ancient civilization; the collapsing star with a core of rare and valuable metal; the world whose inhabitants suddenly died before the heroes arrived; the moon-sized derelict alien spaceship drifting on a collision course with a planet whose people are just attaining orbital flight.

Adventure Hooks _

First Contact: The heroes encounter a strange alien species (either planetside or in their own starship) and must establish peaceful relations. The aliens have their own agenda — find a colony world, recruit new allies, trade for valuable commodities, eliminate all intruders — and the characters must somehow comprehend this and, in most cases, help them attain it to gain their trust and future friendship.

Haunted Planet: While exploring a seemingly uninhabited planet, the characters discover a long-abandoned ruin from some arcane civilization. Although they know the world has no intelligent life, crewmembers suddenly get impressions that someone's following, even hunting them. The life forces of the ancients taunt them subtly, slowly turning them against each other as they chase shadows. When the heroes bring anything from the surface onto their ship, this paranoia affects everyone, including the vessels' instruments, sensors, computers, and weapon systems. The heroes must somehow realize this danger and exorcise it from their ship back to the ruins where the spirits originally resided.

Evacuation: Just as they conclude extensive studies of a primate society, the heroes learn of advancing enemies or an imminent supernova that threatens the simple civilization's existence. With no means of defense or escape of their own, the people rely on the characters for evacuation. After fitting the population, their livestock, and their ungainly cultural treasures on board, the heroes must flee from the imminent threat, then begin a search for a new world for these people to call home.

Unscrupulous Relic Hunter _

Agility 3D+1, brawling 3D+2, firearms 4D, Strength 2D, Mechanical 2D+2, piloting 3D+2, Knowledge 3D+2, aliens 4D, cultures 5D, languages 4D+1, scholar (ancient civilizations) 4D, survival 4D+1, Perception 3D+2, bargain 4D, investigation 4D+2, search 4D, Technical 2D+2, medicine 3D, personal equipment repair 3D. *Move:* 10. *Strength Damage:* 1D. *Body Points:* 12/ *Wound levels:* 2. *Equipment:* starship; personal computer with extensive library of archeological data; laser pistol (damage 4D).

rival relic hunters, competing collectors, and many other similar groups can serve as foils for the characters in these scenes, where the alien influence is merely the motivation. Research, investigation, interrogation, and discovery are possible motivations for such an adventure. These encounters can be similar to incidents with alien remnants. The distinction is that a legacy adventure uses alien material as the motivation rather than the focus.

Information is the most potent alien legacy. An espionage satellite of unknown origin that has spanned across the width of the entire known galaxy and beyond would be invaluable to any number of agencies and individuals. The characters might travel to a dozen worlds and run afoul of innumerable schemes searching for the mysterious satellite before ever even encountering it, much less its true contents. Such a scenario could even be the focus of a series of adventures, with the satellite and the information it contains only coming into focus near the campaign's end. It's even possible that, at the conclusion, the information contained within it's either useless or indecipherable.

Interstellar Hazards

Space is as dangerous and unpredictable as it's vast. In any campaign, regardless of how advanced it may be, only a tiny fraction of the void between systems can have been mapped. Even in well-known and well-traveled systems, there can be areas light-years in length that have never been extensively explored, if for no other reason that there are no immediately identifiable resources contained within that make exploration worthwhile. Planets with no ability to support life and no valuable elements can be given a cursory evaluation and then passed over for decades at a time. Asteroid belts are in a constant state of movement and are dangerous even for the most cautious explorers.

With any campaign where the focus involves the characters and their starship, familiarity can breed contempt with regard to the nature of space itself. Players can become complacent and overlook the dangers their characters face every time they leave a planet en route to some distant destination far across the galaxy. In some cases, however, this can work to the advantage of those creating encounters for such campaigns.

Natural Phenomenon

While there are an abundance of hazards created by intelligent beings that drift through the galaxy, naturally occurring hazards are far more common and typically far more dangerous. Chaos is the nature of space, and there is little that mortal beings can do to influence the grand scheme of the cosmos. The best that can be hoped for with regard to these natural dangers is to map any that are located and attempt to alert others to their location. Unfortunately, many of them can claim countless lives before someone survives to reveal their location to the galaxy at large. Even more unfortunately, there are those who would use the location of a hidden danger like these to their own advantage, as a secret weapon of sorts to waylay their enemies and destroy any who cross them.

Asteroid Field

Asteroid fields are an extremely common phenomenon, found in countless star systems throughout the known universe. They are made when systems first form, as planets begin to settle into orbit around their star. Inevitably, some planets form orbits that intersect with one another and eventually collide, creating a disaster of cosmic proportions. From these celestial head-on collisions, trillions of tons of debris create vast fields of rocks, some of which become captured by larger bodies.

Asteroid belts are typically restricted to certain regions of space, captured as they are by the same gravity that destroyed their parent planets. This is not to say that they are static, however, as the gigantic rocks that make up the belt, some the size of moons themselves, drift through the region. Collisions happen frequently, and any event that creates a disturbance within the region, such as a pitched battle between starships, can send shockwaves throughout the entire belt. It's in this way that many meteors and comets are first created. Obviously, this completely unpredictable and random nature makes it virtually impossible for asteroid belts to be consistently navigated successfully. Most interstellar travelers avoid the belts by going above or below them to prevent any unforeseen drift that could place obstacles in their path.

An asteroid belt can serve as a rather unorthodox center for a campaign, particularly if the characters are using their starship for less than honorable purposes. Because their unstable nature causes most groups to shun them, they can afford numerous places to hide. Criminals use asteroids to avoid their pursuers, and in some cases, they discover relatively stable pockets within the belts. More than one pirate base has been built into a large asteroid and protected with heavy shields. Such a locale can create a sinister atmosphere for an encounter, one filled with a sense of peril as smaller asteroids constantly crash into the shields and are deflected or destroyed. The discovery of the base by law enforcement could make for a battle between multiple starships that takes place in one of the most hazardous locations known.

More legitimate uses of asteroid belts take the form of respectable businesses. Asteroids are comprised of many different elements, some of which can be extremely valuable. Just as planets are extensively mined for precious materials, so too can a planet's corpse be picked over for large deposits of any number of valuable commodities. It may even be possible for normal resources to evolve into something different, given their state of existence in a vacuum and constant exposure to a variety of different forms of radiation. Such precious elements might only be found in asteroid belts, making it far more important for

Navigating an Asteroid Field _

Navigating a field requires a *piloting* roll each round at +20 to the speed difficulty (see the "Spaceship Movement" difficulties on page 18 of chapter 2). Failure results in a collision with one large or several small asteroids, inflicting 5D damage to the starship plus an additional amount of damage equal to the number of points by which the *piloting* roll was missed. A Critical Failure combined with a failure may result in the destruction of an essential system. Use the "Damage Systems" chart on page 25 to select or randomly determine which one.

Piloting in a Nebula _

Every round spent within a nebula requires a Difficult *shields* roll. Failure results in 4D damage being inflicted on the ship by electrical discharge. Every 15 points inflicted in this manner results in one system on the ship sustaining heavy damage. Use the "Damaged Systems" chart on page 25 to select or randomly determine which one.

Nebulae also add +1 or more to *sensors* difficulties — the farther the target is from the tracking ship, the more difficulty it becomes to detect it.

various parties to make use of the belts. Interplanetary corporations could hire freelancers to scout out secure pockets within a belt, find large deposits, or even to scare away rivals.

Although improbable beyond all reckoning, it's possible that planets destroyed in the creation of an asteroid belt might already be home to civilizations that leave remnants to be discovered in the belt's midst. These remains would have be among the most durable objects in the universe to survive such a cataclysm, and would be of interest to many parties simply because of their survival.

Black Holes

Without question the most dangerous of any naturally occurring phenomenon in the depths of space, a black hole is created when a star's natural lifespan expires and it implodes, collapsing in on itself. The gravity of such a collapse is so enormous that nothing can escape its pull, not even light itself. There is a distinct border to phenomenon like these, called an event horizon. Anything that comes too close, anything that crosses the event horizon, is trapped by the black hole's intense gravity and will eventually be consumed by it. It may be possible, with sufficiently advanced technology, to escape the event horizon, but in most campaigns, such things are typically beyond the capabilities of a commercially available starship and are available only to certain military or experimental craft.

Black holes, also called singularities, can be difficult to incorporate into adventures successfully because of their somewhat terminal nature. Any encounter with a black hole has the potential to be lethal for a starship and its crew, and there is little room for error. Assuming a certain degree of technology on the part of the characters, they could be hired to retrieve something or someone trapped within the black hole's event horizon. Any such endeavor would be incredibly pressed for time; there is a very short period between the time an object crosses the singularity's event horizon and the time at which it's consumed. The cargo in question would have to be of great importance, possibly a personage of extraordinary wealth or influence, or an object that could not be replaced and that was necessary for some particularly important task.

Perhaps the best use of a black hole in an encounter is as a looming threat. An ordinary delivery or exploration encounter could be dramatically altered when a starship's interstellar drive fails after the vessel's journey through space is interrupted by a singularity's gravity well. This transforms what the players might expect to be a standard, light-hearted adventure into a desperate race against time to restore the ship's systems and escape the area before the inevitable. Such encounters must be planned carefully so as to equip the characters for success. A campaign that ends when the party is utterly consumed by a black hole's inescapable gravity is generally not the desired outcome for anyone involved, and it can understandably lead to hard feelings among the group.

Somewhat more fantastic or existential encounters become possible when the black hole serves as a gateway to another dimension or location. Singularities used in this manner could radically alter a campaign that has become stagnant or commonplace. Virtually anything can be introduced in this manner, from vast alien civilizations to locales with radically different laws of physics to dimensions where everything the characters know is completely opposite — a mirror universe of sorts. Used in this way, the black hole can be the tool through which an entire campaign can be transformed into anything the gamemaster imagines.

Comets and Meteors

Meteors are large chunks of rock that crash down to planets after being set in motion, frequently from an asteroid belt. (They are often called meteorites should they survive entry into a planet's atmosphere.) For whatever reason, the meteors come free of their position within the system's asteroid belt and rocket through space on inertia until they are captured by the gravity of a moon or planet or simply cross paths with something bigger than they are. If large enough, meteor can destroy all life on a planet by dramatically altering the climate or atmosphere by sheer force of impact. Obviously, most planetary governments wish to avoid occurrences of this nature. Some control fleets of sufficient size to eliminate such threats, but if those ships are involved elsewhere and cannot be freed (such as in the case of a large scale conflict or other commitment), then they will hire freelancers to deal with the situation. Events of this sort can be both profitable and noble endeavors for the intrepid crew of a capable starship.

Hostile Environment of Space _

An unprotected character in space takes at least three points of damage per round or one Wound level every two rounds. One point comes from the exposure to the vacuum, one from the exposure to intense temperatures, and one from the lack of oxygen. (For characters using Wound levels, being exposed to one of these factors results in losing a Wound level every six rounds and being exposed to two of them means a loss of a Wound level every four rounds.)

The gamemaster may increase the damage because of a space debris shower, the intense heat of a nearby sun, the cinematic effects of the setting, and so on. The gamemaster may allow Special Abilities or equipment to slow the rate at which damage is taken or protect against some or all of this damage.

Comets, composed primarily of ice, tend to be more predictable than meteors because they have fixed paths that they travel regularly as they hurtle through the galaxy. Of course, if the path isn't mapped yet, they could cross with the interstellar flight of a ship and damage the drive, causing a sudden halt to the journey. Likewise, a slight altering of a comet's path could send it toward a planet, where it could cause the same damage as a meteor.

Cosmic Storms

Often related to nebulae, the so-called cosmic storms are vast clouds of gas and charged particles that constantly discharge incredible amounts of energy through them, much like atmospheric storm clouds. These storms can drift slowly through the void, and although they rarely present a threat to planets, they can have a devastating effect on space stations, fleets, and lone starships that happen to stumble across them. The energy discharges they frequently exhibit can wreak havoc on a starship's systems despite shielding, and they can disrupt or destroy virtually any part of a vessel's technology, leaving behind a lifeless husk adrift in the midst of a cosmic hurricane.

Cosmic storms are somewhat different that the majority of natural space hazards in that they are a mobile threat. Unlike comets and meteors, they are far too large for there to be any hope of neutralizing them ahead of time. Also unlike comets and meteors, they are exceptionally slow-moving and can be detected well in advance of their arrival. This allows for gamemasters to foreshadow the storm for lengthy periods of time and use them as a distant threat, a background for initial encounters in a campaign that slowly builds until it arrives near where the characters' vessel is moored. This can provide a change of pace as the characters find themselves planet-bound for the storm's duration, or it can be used to much more dramatic effect if the characters' ship is docked at a space station when the storm finally arrives. Although most modern space stations take precautions against such phenomenon by employing advanced shielding, survival is never assured under such dire circumstances.

Nebulae

Beautiful and potentially deadly, a nebula is a vast field of charged gases that dominates a large area of space, sometimes light-years in length. These gases are relatively static in their area of effect, although they do shift and flow within their borders. Over thousands or millions of years, these gases congregate and create new stars, giving birth to new star systems in the process. This rare event is the subject of great interest from stellar cartographers, but it has only been witnessed and recorded a handful of times in galactic history due to its unpredictable nature. In many ways, a nebula is the antithesis of a black hole. It's the fetal form of a star waiting to be born, just as a singularity is the rotting corpse of one that has died and now seeks to destroy others in its final hours. Despite that a nebula has the potential to bring new life to planets after millions of years, and despite the beauty that many find in them, they can be every bit as deadly as any other phenomenon detailed in this section.

As static fixtures in the galactic landscape, nebulae are typically well documented and identified on most modern star charts. Any pilot with a reasonable degree of skill and access to dependable equipment can avoid them almost without thinking. The excited gas particles that make up a nebula can play havoc with a starship's advanced electrical systems, and those who venture into one for whatever reason rarely emerge without some form of damage.

Nebulae are best used as a backdrop for an encounter, serving to block a means of escape or force a starship to remain in one area for long enough to complete the scenario. Any conflict-based encounter could find its dramatic climax in a peril-filled race through a nebula's outer edge, and any exploration-based adventure might require an intrepid crew to delve into the nebula's heart in search of some long-forgotten remnant of the past.

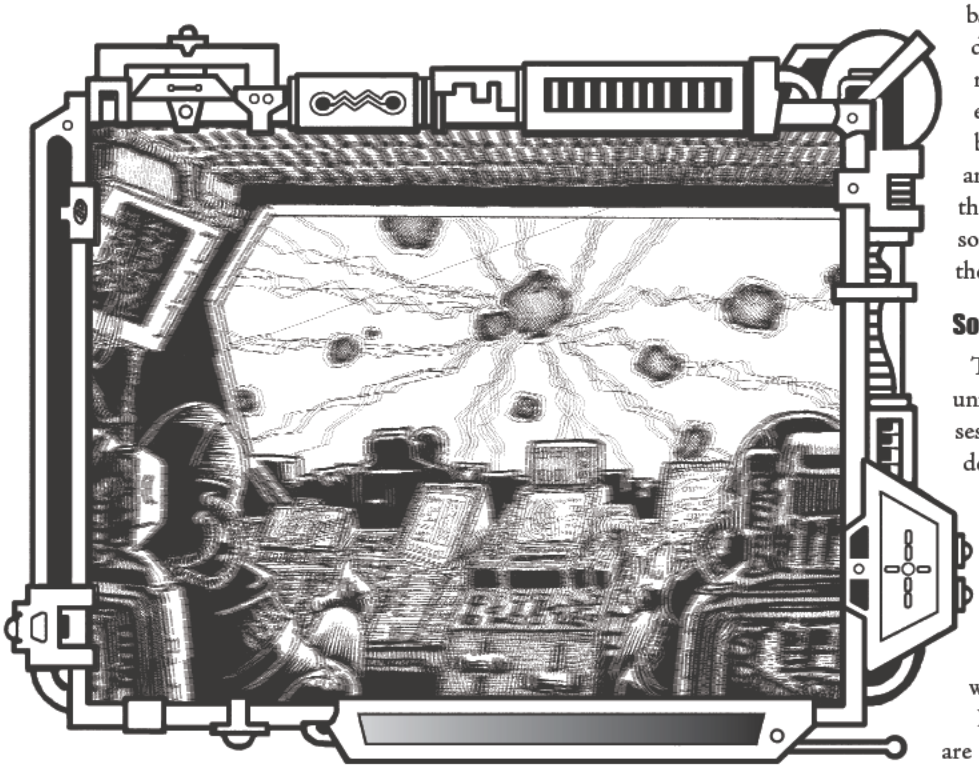

Solar Flares and Supernovas

There are few things in the known universe that simultaneously possess such incredible potential for destruction and creation as a star. With a few rare exceptions, life cannot exist without the warmth and heat provided by a star. Life begins with these brilliant jewels of the galaxy, but unfortunately it can end with them as well.

Relatively speaking, solar flares are largely benign in nature. The

Subdirectory > Effects of Gravity _

Every so often, characters are going to come up against alternate gravities. Those accustomed to 1-G environments react differently when gravity changes. For very cinematic and simple difficulty modifiers, use the following values (based the ones suggested by the "Combat Options" chapter of the rulebook).

> In low gravity, all *Agility*, *Strength*, and tool-manipulating *Technical* attempts have a -1D (-3) modifier.

> In null gravity, all *Agility*, *Strength*, and tool-manipulating *Technical* attempts have a -2D (-6) modifier.

> In heavy gravity, all *Agility*, *Strength*, and tool-manipulating *Technical* attempts have a +3D (+10) modifier.

Gamemasters who want a little more detail in their gravity situations can use these guidelines, which have been designed for ease and cinematic action.

All *acrobatics*, *brawling*, *firearms*, *melee combat*, *missile weapons*, *riding*, *sneak*, *throwing*, and *lift* attempts get a modifier equal to 1 for every 0.1 difference in gravity between 1 G and the current gravity. (Round down.)

Example: In a 0.25-G environment, the modifier is 7, while in 1.2 G, the modifier is 2. In 0 G, the modifier is 10.

The gamemaster may also apply this modifier to other *Agility*, *Strength*, or other tasks that depend on movement, lifting, or precise manipulation. Generally, the modifier adds to the difficulty, but in some cases, especially lifting or catching in low gravity, the attempt may become easier and the modifier is subtracted from the difficulty.

Any *sleight of hand* or *Technical* action that employs tools risks having the tool or object used spin out of control (in light gravity environments) or becoming too heavy to handle properly (in high gravity environments) on a Critical Failure.

All movement rates equal the base movement rate divided by the number of gravities. Thus, a character who can jump 2.5 meters in a 1-G environment jumps 0.8 meters in 3 G and 10 meters in 0.25 G.

The distance characters can throw objects also changes. Divide the throwing distance by the gravity to get the new distance. Thus, an object thrown five meters in a 0.01-G environment can travel 500 meters or until it leaves the affected area or is stopped by something. This also means that objects in 0 G can travel forever in a straight line, unless they exit the field or something stops them.

Falling damage is determined differently when the gravity varies from 1 G. Divide 1.5 meters by the number of Gs to determine the distance the character would have to fall in order to sustain 1D of damage. (Round down to the nearest half meter.)

Example: A character falling 10 meters would take 6D of damage in a 1-G environment. If that environment is 3.75 G, he gets that much damage after a 2.5-meter fall; while in 0.25 G, it would be 40 meters before he sustained that amount.

Another way to look at this is to multiply the damage total (not the die code) for a similar fall in 1 G by the number of current Gs.

This also means that a character can't fall in 0 G; rather, the character is injured from being pushed into objects. (Apply only the base damage, not any damage bonus.)

Gravity can affect how much damage a dropped object will do. Multiply the amount of damage that the object does (the total, not the die code) by the number of G. In 0 G, a dropped item simply floats.

To determine how much an item weighs in the new gravitational pull, multiply the weight by the number of G affecting the item. For example, a man weighing 90 kilograms in 1 G weighs 180 kilograms in a 2-G environment. (For gamemasters who wish to determine whether a character could lift his new weight, the *lifting* difficulty is based on the difference between the character's standard and the new weight — not on total new weight.)

Zero G generally has no effect on objects, except to make them easier to move (because they no longer have a weight — though they still have mass and can still hurt if a character runs into them!). An object in 0 G floats when moved.

Gamemasters may wish to impose permanent penalties (in the form of Hindrance Disadvantages) on characters for long-term exposure (a month or more) to unfamiliar gravity conditions. Gamemasters may also add other factors (such as recoil affects) to nonstandard-gravity situations, as they think best suits their campaigns.

Low- and Null-Gravity Conditions _

When characters encounter low (less than 1 G) or 0-G conditions, they use their *flying/0-G* skill to perform actions effectively. Since most species orient themselves to gravity environments, they're often confused and clumsy in weightless situations. Training can help the character understand how body weight, counter balance, handholds, and other factors work in weightless conditions.

As characters first enter a low- or null-gravity environment, they make, as a free action, a *flying/0-G* attempt. The orientation difficulty is 5 for those with the skill or 10 for those who default to the attribute. The characters use the result points (the difference between the difficulty and the roll) to reduce the gravity modifier up to a maximum amount equal to the gravity modifier.

The modifier lasts until the character gets a Critical Failure on any roll or until the character leaves in the same environment (whichever comes first). After the Critical Failure, the character needs to take a moment to reorientate herself. As a free action, she makes an orientation attempt again at the same difficulty as the initial attempt. The same conditions apply for the new gravity orientation modifier.

Characters may also make the orientation attempt as a normal action, to see if they can get themselves more accustomed to the environment (and lower the gravity modifier more). Those who wish to take extra time getting used to the environment get the bonus for preparing.

Accessing: D6 Space Ships File 5
Notes: Must learn flying/0-G.

exact cause of solar flares have never been precisely determined, as there seems to be some strange variation between systems. Some flares are caused by ill-defined "storms" across the surface of a star. Others may be generated by the ongoing chemical reactions within the star's heart. Still others owe their origin to gravimetric fluctuations caused by asymmetrical orbits. Regardless of their source, solar flares send pillars of flame billowing out from the star's surface like hairs reaching out from a head. This analogy is far from perfect, obviously, but the idea is essentially correct. Given how large a star is, the "hairs" generated by solar flares are truly spectacular, capable of completely vaporizing entire star cruisers or space stations that may be too close when this phenomenon occurs. Solar flares can also interfere with communication, sensor readings, and navigation throughout an entire system, dramatically complicating even the most basic starship functions for days on end. Used in this way, solar flares need not even play a direct role in an encounter to have a noticeable effect on the events over the following few days.

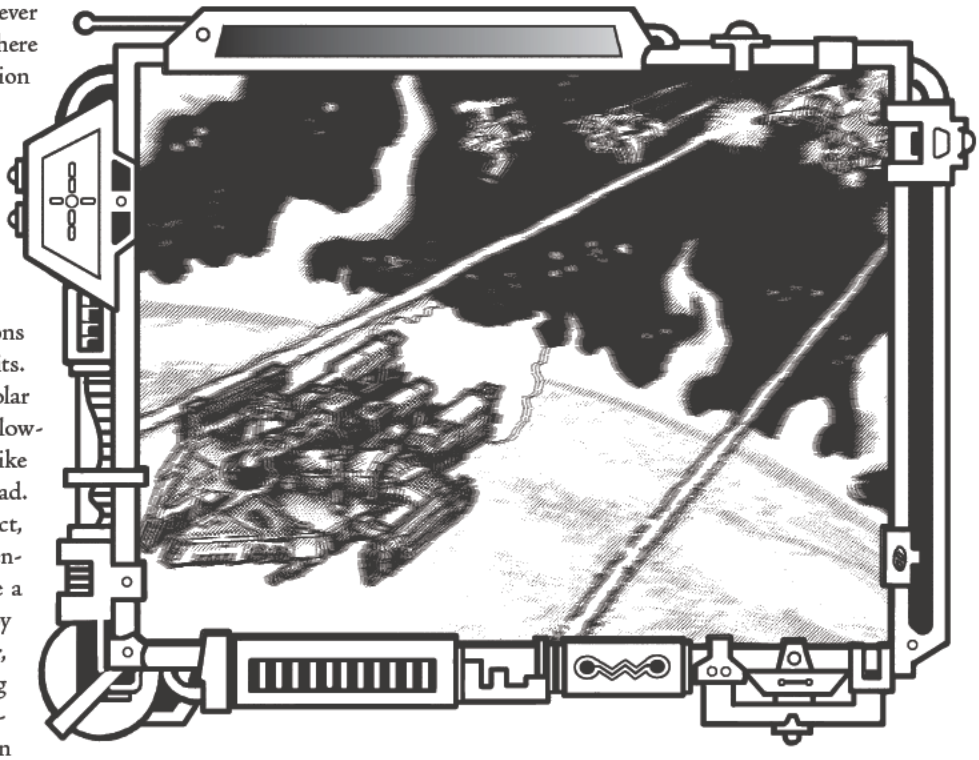

A supernova is the cataclysmic death of a star. The fusion reactions that take place in the star's heart gradually decay over time, changing in style and composition. As these reactions decay, eventually the star becomes unstable and extremely volatile. When this reaches a critical point, the reactions can no longer sustain themselves, and the star goes into a supernova stage, detonating with the force of more nuclear weapons combined than Humankind has created throughout the history of a thousand worlds.

The effects of such an explosion are what might be expected. The planets closest to the star are usually vaporized, with not even gases remaining. Planets in the system's inner half are destroyed when the shockwave reaches them, leaving little more than asteroids and trace elements. Outer planets are broken apart by the diminishing power of the explosion. The result is an empty pocket of space where a thriving star system once existed, with little more than the manner of debris one might expect from a typical asteroid belt. (Alternately, the star might implode upon itself in the final stages of its decay, creating a black hole that will consume anything left from the system's destruction.)

Solar Flares

The presence of solar flares increases the difficulty of all *comm*, *navigation*, and *sensors* roll throughout the system by +5, along with any other effects the gamemaster wishes to include.

Artificial Hazards

Natural phenomenon are hardly the only threats posed by the galaxy at large. Despite that civilized beings utilize only a fraction of the space that has been successfully explored at this point, there are nevertheless regions that have definite dangers as a result of some artificial creation that lingers after its designers have long since departed the area. For whatever reason, either through intent or happenstance, these phenomenon can be every bit as threatening as any natural danger.

Debris Field

Battles fought on an interplanetary scale are terrible, gruesome spectacles. The raw destructive potential of even a single star cruiser is truly frightening to behold, but a pitched battle between two, or even an entire fleet, can leave entire star systems hopelessly scarred for decades afterward. Although more localized than an asteroid field, the field of debris left behind following a battle can pose not only a significant navigational hazard, but a definite hazard to any ship that travels through it even at a safe speed. This is particularly true with debris left from primitive space vessels, some of which use dangerous chemicals in their propulsion drives. Some pockets of these chemicals persist, and they can be caustic enough to damage a starship's exterior if left exposed for long enough. Anyone attempting to exit the vehicle in such conditions would find his environmental suit quickly eaten away.

Despite the obvious dangers, debris fields are popular destinations for independent businesspeople for a number of reasons. The first, of course, is salvage. It's possible for entire sections

of a star cruiser to remain intact once it breaks up in a battle, and these large pieces are full of electronics and weapons that can fetch a spectacular price on the salvage black market. The risks gathering such items are considerable, but the seductive allure of reward is too much for many to overlook. Criminals in particular are keen to acquire such forgotten weapons, as the illegally obtained military weapons cannot be traced and there is little worry that law enforcement will be able to track them through records of sale and purchase.

Information is another major reason to return to a debris field. Many cruisers have compartmentalized computer backup systems, and informational records can survive within these systems for long periods of time even after the cruiser's destruction. Either side involved in a battle will wish to retrieve such secrets following the battle's conclusion, and many third parties as well. Even if the conflict is not military in nature, information found in the wreckage may still be of great value to someone. Mercenary or pirate fleets that are involved in conflicts with legitimate fleets or various law enforcement armadas may leave behind data that could serve as evidence of their many crimes or provide the location of their hidden bases. On more than one occasion, smaller scale battles have been fought between starships and soldiers in space suits among the debris following a major battle, as both sides attempt to recover the information lost in the battle.

Abandoned Traps

For whatever reason, be it military, scientific, self-defense, or megalomania-induced cruelty, there are instances when beings leave behind devices that can only be described as traps. These devices, sometimes ancient holdovers from a previous era, range in complexity from crude explosives to elaborate traps designed to imprison starships until they can be retrieved, something that may not be possible as the creators are often no longer alive or at least in the area to maintain them.

The first and most basic type of trap is one designed to destroy any ship that ventures into its area of effect. Proximity-activated explosives and simple mines are the most common form of these traps. There may be vast fields of mines that have been located and defused by a galactic government, but thousands individual mines could be still scattered throughout the galaxy, waiting to be discovered by some poor, doomed starship crew hurtling through the galaxy.

Proximity charges placed on asteroids through commonly used passages are another common variation of this theme. These traps can have far-reaching repercussions, as an explosion within any asteroid belt can create a chain reaction that sends asteroids spiraling through space, where they may damage other ships, space stations, or even planets as they crash through the system.

More elaborate, insidious, and far rarer traps are those that are designed with a specific purpose in mind. These often involve devices such as tractor beams, gravity-well projectors, electromagnetic pulse generators, and all other manner of powerful machines. Some devices are created as a military project, as a means to detain and capture enemy starships without need for risking valuable assets in combat. Some more rationally minded pirate groups prefer such techniques as well, as there is far less chance of damaging the prize during capture if it has been denied power long enough for systems to shut down. Some even go so far as to allow the ships to lay dormant long enough for the crew to expire before returning for their prize, guaranteeing no resistance. A few corporations use similar tactics against their rivals, and even certain scientific groups have experimented with such devices beyond the frontier in an attempt to acquire specimens for study. Commonly, these tactics are restricted, and those caught practicing them without permission suffer enormous penalties. However, space is quite vast and impossible to patrol completely.

Perhaps the most insidious and enigmatic use of traps is in the hands of individuals whose motivations may or may not be known to those who suffer their predations. Some wealthy eccentrics find sport in hunting starships like big game, trapping them in elaborately constructed circumstances that require their crews to succeed at nearly impossible tasks in order to free themselves. Others may be powerful, godlike beings who enjoy testing "lesser beings" in order to learn more about mortality and the abilities of those who do not share their power. Beings of this nature, whether merely eccentric or truly omnipotent, can serve as a recurring threat to any starship's crew and may even upstage existing campaign villains for short periods of time.

These hidden dangers can serve as excellent sources for encounters when the campaign is at a point where something is needed to interrupt the normal flow of events. If properly designed, traps can provide an outstanding problem-solving challenge for the starship's crew to overcome, perhaps exercising skills that they are not often called upon to use.

Politics and Contraband

Despite the infinite width and depth of space, there is no single quantity found within it that simultaneously has more capacity for insidiousness and nobility than the soul of an intelligent being. Just as the histories of thousands upon thousands of individual planets are full of treachery, betrayal, war, and suffering, so too is the galaxy's history full of truly wretched, unthinkable acts of cruelty that are easily the equal of any harmonious event celebrated throughout the known universe.

For additional ideas, see the "Space-Faring Authorities" section, which starts on page 7 in chapter 1.

Criminal Enterprises and Law Enforcement

Numerous films and works of fiction have established the charming scoundrel as a staple of the space genre of science fiction. The notion of playing surly yet noble rogues, plying their trade amidst the galaxy's seedy underbelly, can be quite appealing to many players interested in a space-based campaign. Fortunately for gamemasters, the genre is full of encounter material to cater to the needs of such players. It can be a simple matter to construct a campaign built on such ideas, or to introduce such elements into a campaign of another sort.

In addition to the relatively common instances of criminal-based campaigns, it's also fairly normal to base campaigns on the exact opposite premise: that of law enforcement. Bounty hunters, sector rangers, galactic intelligence agents, and dozens of other permutations on the same basic concept have their place in the

The characters serve aboard a capital ship as members of the crew. They might work among the rank-and-file, carrying out the basic duties of comm operators, sensor trackers, shield technicians, gunners, security officers, engineers, or even mess hall cooks in the face of hostilities against an enemy fleet. For a more high-powered campaign, make the characters key members with various command duties aboard the vessel: chief engineer, bridge officer, gunnery coordinator, political liaison, tactical advisor, executive officer — even captain!

Adversaries and Allies _

This campaign requires an enemy and an allied military force. Although the heroes serve aboard one capital ship, they may receive assistance from other fleet vessels accompanying it in different missions as a task force or vast battle armada. Give the enemy fleet enough resources and capital warships to provide a demanding challenge. Create a reason behind the conflict: misunderstanding with alien diplomats, political or ideological disagreements, or sheer conquest. Although the characters' success and failure should influence the overall course of the war, actions elsewhere in which they do not take part may affect their theater of operations.

Starships _

Choose a capital ship that best suits the planned campaign and the characters. The "Advanced Ship Design" chapter offers sample characteristics for carriers and patrol frigates. Smaller vessels like frigates and destroyers need require huge crews and thus require personnel to undertake more duties to ensure smooth operation. Larger craft like carriers, cruisers, and battleships demand such immense crews that the vessel often seems like a floating city.

After deciding which ship to use, develop enough details about it to make the craft seem like a complete setting: game characteristics, deck plans, gamemaster's characters, standard regulations, typical crew characteristics, sample layouts for quarters, mess hall, wardroom, and facilities the heroes to use while on duty and off. Determine basic procedures for standard operation, general quarters, damage and hull breach, evacuation, and other emergencies.

Support Locations _

The ship on which the heroes serve functions as the central location for the campaign. Here they live, work, and interact with other crewmembers. They don't always face the enemy, and when they do, it usually involves viewing them at long ranges from bridge viewports, control displays, and gunnery control consoles.

Nobody spends all their time in space. Other locations may help the campaign along and provide a change of pace from shipboard duties. The characters might take shore leave at a military depot, fleet base, deep space station, or stardock repair facility between operations. They might supervise drop-ship operations for ground assaults. Should enemy fire destroy their vessel, the heroes might have to evacuate, using escape pods to reach a habitable planet where they must survive despite enemy attempts to hunt them down.

Adventure Hooks _

Secret Weapon: The heroes' ship attacks a smaller enemy vessel in the course of its patrols, only to find that their adversaries have concealed some new, more destructive weapon technology aboard. Although the characters beat a hasty retreat, they must gather intelligence on this new enemy weapon and find some way to defeat it before the ship (near their patrol sector) decides to go on the attack.

The Prisoners: After a devastating raid against an enemy supply convoy, the characters capture several escape pods of personnel. They must manage their imprisonment and interrogation to determine their captives' identities, the final destination for the convoy, and whether they know of overall strategies for invading in this region. Several prisoners attempt to persuade the heroes to join their side and liberate them, especially before anyone finds out that the captives include several high-ranking military officers.

Cat and Mouse: After a particularly desperate confrontation with a superior enemy vessel, the heroes' ship seeks to hide within some astrographical feature that interferes with sensors and communications: a nebula, cosmic storm, or asteroid field. The characters must maintain watch for the enemy ship hunting them, carefully navigate through their astrographical cover, and effect repairs so they can either ambush or flee their pursuers.

Saboteur: During a seemingly routine skirmish repelling the enemy, the character's vessel sustains damage, malfunctions, or other failures attributed to sabotage. While the ship travels back to base for resupply and repairs, the heroes must uncover a secret agent working among them, reveal his plans, prevent him from relaying classified intelligence to the enemy, and stop his scheme to disable the ship at a crucial moment during an upcoming battle.

Into the Trap: One of the heroes intercepts and deciphers enemy intelligence claiming that they're aware of an impending allied invasion of a border world and plan to ensnare the task force with a hidden fleet of power vessels operated by elite crews. The character and her comrades must convince the commanders of their ship and the fleet to cancel the attack, or at least alter their plans to prepare for increased opposition, despite high-ranking officers who have utmost faith in their strategy and refuse to believe their plans have been compromised.

Subdirectory > Starfighter Squadron _

The heroes serve as fighter pilots in a squadron on the front lines of a hostile conflict: an open war against another interstellar government or powerful alien species, a prolonged police action against pirates, a civil war between factions in a divided empire, or a fight to bring renegade systems in line.

Adversaries and Allies _

Gamemasters should establish two different military forces and ally the characters with one of them. As a unit within a larger fleet, the squadron receives some degree of support during its operations, but it primarily functions on its own along the fringes of the war. The enemy fields an equally formidable force: fighter squads of its own, capital warships, landing craft, elite commando units, heavy ground assault forces, spy ships, and supply freighters. Provide some motivation for the conflict: One side might prosecute an invasion of the other's territory. The two factions might violently disagree about politics or moral issues. The enemy might simply be bent on efficient annihilation of the heroes' side.

Starships _

Squadron campaigns center around fighter craft. Commanders assign each hero their own snub fighter, light bomber, or other small vessel suitable to the mission at hand. Sometimes characters stick with the same craft the entire storyline; other times their equipment varies.

Design suitable fighters to help the heroes achieve victory in combat and survive unfortunate incidents. Make sure they possess enough armor, shields, and weapons to hold their own in a dogfight, and allow for modifications for different mission profiles against larger capital ships and ground targets. Devise escape systems so heroes can eject and survive if enemy fire destroys their craft. Pack some survival equipment in a rucksack behind the cockpit so they can carry on if they crash land on a planet. Since everyone's in the same squadron, each character pilots the same kind of ship.

Gamemasters can also use the light defender or strike fighter characteristics from the "Example Ships" chapter in this book or the in-system defender characteristics on page 118 of the *D6 Space* rulebook.

Support Locations _

The characters require a base from which to sortie against the enemy. Most squadrons are stationed aboard capital-sized carriers, orbital facilities, planetside bases, or some combination of the three if command transfers the squadron between different hot zones. Each provides living and recreation quarters, docking hangars, repair facilities, and set defenses. Customizing a base with maps, military and civilian gamemaster's characters, and detailed facilities can offer more opportunities for roleplaying and provide heroes with a "home" they can fiercely protect. Personnel aboard capital ships might also engage in adventures outlined for "Fleet Service" campaigns.

Adventure Hooks _

Preemptive Strike: Acting on time-sensitive intelligence, headquarters assigns the squadron to engage an enemy force entirely unprepared for a strike. The target craft occupy a repair staging area and resupply depot with minimum defenses behind enemy lines. At first the raid goes successfully, with the characters inflicting incredible damage against target ships. Then fully operational fighters and cruisers move out from amidst the vessels under repair; the facility was intentionally stocked with derelict ships to lure the heroes into a trap! The characters must fight their way out of stardocks, debris fields, and advancing enemy craft.

Ground Cover: During an assault of an enemy-held planet, the commander orders the squadron to provide ground cover to infantry and mechanized artillery forces advancing on a dirtside objective that must be captured relatively unharmed (the capital city, vast supply depot, ore processing facility, communications array, power station, etc.). The heroes must fend off intercepting fighters, identify and destroy threats ahead of the ground units, and disable defensive emplacements near the target. Anyone who goes down crashes behind enemy lines and must hold out until allies arrive.

Hold the Line: The squadron must hold its base, planet, or patrol area against an overwhelming onslaught of enemy fighters and light bombers intent on invasion. They must overcome this assault through desperate flying, carefully allocating their resources, and defeating key craft and aces. Encounters include head-on dogfights with enemy craft; defense sorties to protect crucial sensors, communications, and depot installations; and running escort for incoming freighters with supplies vital to the squadron's continued successful operation.

Guard the Retreat: The squadron's planetside base receives orders for all military and civilian personnel to retreat to a rearward rendezvous point in the face of devastating enemy advances. The characters must delay an advance force sent to capture the base ahead of the main enemy fleet to give base personnel time to destroy sensitive data and technology, scuttle the facilities, and flee in cumbersome, lightly armed transports. Should any raiders get through, the squadron must chase them down before they capture any vital intelligence or personnel. The heroes must make sure their fighters do not sustain such damage as to prevent them from jumping to the rendezvous system and trapping them behind enemy lines.

Fighter Pilot _

Agility 2D+1, blaster 3D, Strength 2D, Mechanical 3D, comm 3D+1, gunnery 4D, navigation 4D, piloting 5D, shields 4D, sensors 3D+1, Knowledge 1D+2, astrography 2D+1, Perception 2D, hide 2D+2, investigation 2D+2, search 3D, Technical 2D, flight systems repair 3D+2, gunnery repair 3D. *Move:* 10. *Strength Damage:* 1D. *Fate Points:* 0. *Character Points:* 2. *Body Points:* 11/ *Wound levels:* 2. *Equipment:* blaster pistol (damage 5D); helmet (Armor Value +1D to head only).

System Patrol Officer _

Agility 3D+2, dodge 4D, firearms 4D, melee combat 4D, Strength 3D, Mechanical 2D+2, exoskeleton operation 3D, gunnery 3D, navigation 3D, piloting 5D, Knowledge 3D, bureaucracy 3D+1, security regulations 4D, Perception 3D, investigation 4D, search 3D+1, Technical 2D+2, flight system repair 3D+2, security 3D+2 *Move:* 10. *Strength Damage:* 2D. *Fate Points:* 0. *Character Points:* 2. *Body Points:* 11/*Wound levels:* 2. *Equipment:* blaster pistol (damage 5D); body armor (Armor Value +1D).

genre. The combination of authority, independence, and the constant challenge of ruthless, violent opponents can be highly enticing despite the lack of material rewards that playing the opposite side of the coin typically offers.

Regardless of which option a crime-based encounter or campaign focuses on, it's possible to create an atmosphere more befitting an inner-city police drama than a fantastic tale of aliens, black holes, and the wondrous sites of the universe. Using space as a backdrop, a campaign such as this can tell almost any tale the gamemaster and players can envision, with the genre being added for group appeal or scenic benefit.

System Patrol Craft

Planetary governments are stereotypically paranoid agencies typically staffed by individuals who are constantly fearful of threats to their personal power. In a typical star system containing anywhere from 10 to 24 planets, it's virtually impossible to monitor even a fraction of the vectors from which a potential threat could approach. Even vast fleets of starships could not possibly expect to monitor all traffic into and out of a system. The best a government can hope for is to place patrols and space stations along the most frequently traveled routes and to distribute a reasonable number of independent system patrol craft throughout less frequently traveled regions. System patrol craft are not particularly powerful, but they are sufficient to deal with most privately owned starships and small pirate cruisers. They normally operate outbound, or out of dock, for weeks or months at a time, making it more difficult for anyone attempting to follow their movement to track them. At any given point, individuals entering important systems for illicit purposes can expect there to be two to three dozen system patrol craft circulating through the near-star region, hunting for those will ill intent behind their visit. (Less critical systems may get only a few patrol craft.)

An entire campaign could be developed wherein the characters take on the roles of a system patrol craft's crew. The position would allow characters to enjoy liberal amounts of autonomy and authority, not to mention a larger starship with more powerful defenses, weaponry, and power system than most commercially available craft. Given the lengthy tour of duty such vessels normally enjoy, the patrol craft could become much more of a focus in the campaign than a starship might normally enjoy. A detailed floor plan of the ship would be of great benefit for such a campaign, as it would play an integral role in each encounter.

Smugglers

No criminal career has been so glorified in the space genre than that of the smuggler, due in no small part to the inclusion of smugglers in numerous popular films that are considered icons in the genre. Almost everything that can be appealing to play in a space-based character can be found in some degree in the archetypal smuggler. They can be suave, daring, bold, independent, and cocky, or at least they have been presented as such in many popular works of fiction.

Heroic smuggler encounters can revolve around the use of a greater evil that places the acts of such a crew in perspective. What harm comes of a little larceny or smuggling when faced with the horrors of war or slavery? Characters who are not involved in smuggling may come into contact with such individuals and receive an entirely different point of view based on what transpires with them. Encounters with heroic smugglers can present a theme of "lesser evils," in which smuggling essential items such as food or medicine behind the lines of war-torn or trade blockaded planets can provide not only considerable profit but also substantial relief to those who suffer from events beyond their control.

Those with a more sinister sense of the galaxy may wish to design encounters that highlight the more damaging side of smuggling. Those crews who regard it as a noble profession, perhaps influenced by encounters with heroic goals, may find that the universe is far less pleasant than previously imagined. Smugglers do not only traffic in harmless but illegal substances but also in many substances that have an impact well beyond the small criminal circles in which they travel: weapons of mass destruction, highly addictive narcotics, intelligent beings sold into slavery, or priceless religious artifacts stolen from primitive peoples whose culture spirals into chaos without them.

Pirates

Pirates are the quintessential threat of space travel, a ruthless danger created by the greed and violence of mortal beings that lust after wealth and power at the expense of other beings. Space is so unimaginably vast that at any given time only a tiny fraction of it's filled with starships or space stations. The rest goes unseen and unknown by the citizens of the civilized galaxy. It's there, in the void between life and emptiness, that pirates make their living. The threat they pose can range wildly from small private craft equipped with improvised equipment

Smuggler _

Agility 2D+2, dodge 4D, firearms 4D, sleight of hand 3D+1, Strength 2D, Mechanical 4D, gunnery 4D+2, navigation 4D+1, piloting 4D+2, Knowledge 2D+1, astrography 3D, business 3D, streetwise 3D+2, Perception 3D+1, bargain 4D, Technical 3D+2, flight systems repair 4D+2, security 4D. *Move* 10. *Strength damage:* 1D. *Fate Points:* 0. *Character Points:* 2. *Body Points:* 11/*Wound levels:* 2. *Equipment:* starship with hidden cargo holds; blaster pistol (damage 5D); encrypted personal computer with astrogation coordinates and contact names.

Pirate Campaign _

Seeking a campaign more suited for outlaw characters? Adapt the "Fleet Service" setting (described on page 75) and adventure hooks to a pirate vessel or fleet, with the galactic navy, rival privateers, and the customs service as enemies; merchant vessels as targets; and friendly pirate bands and criminal organizations as allies. Incorporate a starfighter squadron for scout and interception duties. Develop a haven where pirate characters can recuperate from encounters with the law, repair their craft, and store or sell their loot.

Pirate _

Agility 3D+2, brawling 4D, dodge 4D, firearms 5D, Strength 3D+1, Mechanical 2D+2, Knowledge 2D+2, streetwise 3D+2, Perception 3D, con 3D+2, search 3D+1, Technical 2D+2, computer interface/repair 3D, security 3D+2. *Move:* 10. *Strength Damage:* 2D. *Fate Points:* 0. *Character Points:* 2. *Body Points:* 14/*Wound levels:* 2. *Equipment:* blaster pistol (damage 5D); grenades (damage 6D; 2 units); protective vest (Armor Value +2).

to entire fleets of cruisers that can attack even the largest and most well-protected trade groups without fear of defeat.

The most obvious use is the pursuit of the characters' ship by pirates intent on taking their cargo. Any such encounter should contain a sense of dread and helplessness as the pirates seize what they want and leave the rest, with varying stages of violence involved in the process depending on the pirates in question. Independent starship crews are a cut above the rest, however, and they may not be so inclined to let the matter rest. This is understandable, and can lead to further encounters wherein they seek vengeance upon those who have wronged them. Alternatively, they could encounter them again somewhere along the line, granting them a chance to take back what is theirs when the pirates least expect it.

Many great campaigns have been conducted with players' characters taking on the roles of pirates. The starship crew may take the form of privateers in some galactic conflict, or they may simply be another flavor of the same dashing rogue that many imagine as the archetypal smuggler. Whatever the background, merchant trade groups, planetary militias, law enforcement agencies, and even other pirate groups can be potential adversaries for a pirate crew. A truly creative encounter could pit them against some greater foe in a temporary alliance with one of the same groups, which always proves to be interesting and complicated.

Slavers

Slaving is among the most despicable acts that can be committed against intelligent beings. Depriving another being of the most basic freedoms and choices is a cruel, heinous crime that only the most heartless individuals would even contemplate. Unfortunately, the galaxy seems to have individuals of such a nature in more than adequate supply. While slaving is against the law in almost every advanced civilization, there are more brutal worlds where such practices are perfectly acceptable, and there are always groups or individuals who are eager to embrace the inexpensive labor that slaves can provide, increasing their profit margins in any number of legitimate or illicit enterprises.

Slavers frequent the galactic frontier, where law enforcement is sparse and potential slaves are more available. Primitive alien species are among the most common victims of slavers, as there are few specific galactic statutes against a particular race (although there are still many against slavery in general), meaning the potential penalties are marginally less severe. In addition, the primitive state of such beings, many of whom are plucked from tribal civilizations, makes it easy for a handful of slavers to dominate vast numbers of them with relatively little difficulty. There might be instances of entire planets falling under the heel of a single crew of slavers manning a lone starship with factory standard weaponry. A starship crew's first encounter with a primitive people could be severely colored by that race's previous experience with slavers, making them either extremely hostile to all off-worlders or merely fearful in the extreme. A series of encounters could be constructed around the premise of the crew discovering a new world and slowly coming to realize the involvement slavery has had in the development of their new friends' culture.

Presumably, an encounter for a space campaign would involve the characters acting in opposition to slavers, as there are few players who are comfortable participating in such an insidious practice, even in a role-playing exercise. In the event of such an encounter, the characters could face any number of different opponents. The slavers themselves, of course, will likely not be a great deal different from the characters: entrepreneurs who own their ship and use it to make a profitable living (though, in the case of slavers, at the expense of other intelligent creatures). An encounter such as this can provide a rather sinister reflection of the characters — a look into the potential for evil that the party has (hopefully) managed to avoid thus far in their careers. Law enforcement characters will have a clear and obvious mandate to put a stop to any slaving activity immediately, though there may be an element of undercover work involved. This could make for an interesting encounter or series of encounters as the characters experience the darkest side of the galactic criminal underworld.

Another recurrent theme involving slavery is that of a party of criminals contracted to pick up an unknown cargo, which turns out to be slaves. This can serve as a turning point in a campaign,

Slaver _

Agility 3D+1, firearms 4D, melee combat 4D+1, Strength 3D, Mechanical 3D, navigation 4D, Knowledge 2D+2, aliens 3D, streetwise 3D+2, Perception 3D, command 3D+1, con 4D, Technical 3D. *Move* 10. *Strength damage:* 2D. *Fate Points:* 0. *Character Points:* 2. *Body Points:* 14/*Wound levels:* 2. *Equipment:* starship with cargo hold modified to support life; knife (damage +1D); blaster pistol (damage 5D); stun baton (damage 4D stun).

when the characters finally confront a line they will not cross despite the potential for profit or prestige among their criminal cohorts.

It's possible to construct scenarios or campaigns wherein the characters take the role of slavers, although this is discouraged for use by all but the most experienced and mature roleplayers. Such encounters would have a very different feel indeed and could perhaps best be used as an ongoing background enterprise for the characters that rarely takes center stage. When it finally does come into the spotlight, an encounter could be constructed so that it serves as a turning point, where the characters finally realize the horror of their actions. Of course, if the players are comfortable with the notion of exploring the more sinister elements of roleplaying, then they could continue in their efforts to whatever extent the gamemaster feels comfortable involving them.

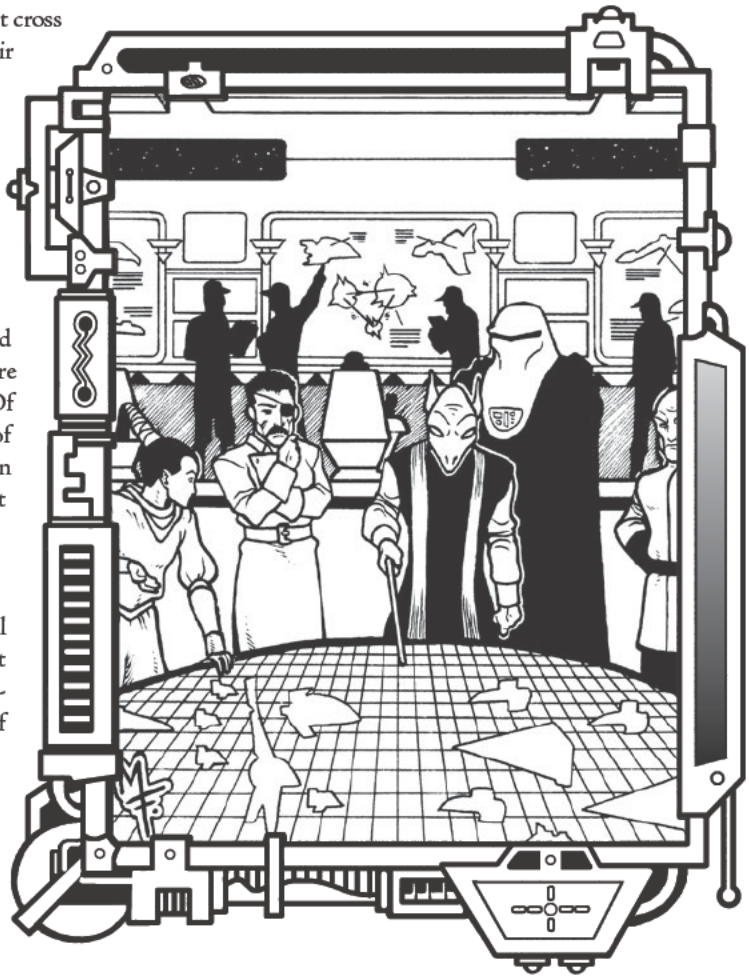

Hostile Intentions

Unfortunately, it seems that conflict is a universal truth. There is no culture known to exist that does not have some instance of war or violence liberally appearing in its history, and there are perhaps a handful of planets throughout the galaxy where violence has been eliminated from their culture.

Intergalactic Warfare

There are an almost infinite number of reasons that planets and governments go to war, ranging from legitimate and irreconcilable differences in philosophy to the greed of a handful of powerful, petty individuals. Regardless of its cause, technology can further war such that a conflict between two advanced cultures can lay waste to entire solar systems, and the term "weapons of mass destruction" has taken a new meaning. When a lone star cruiser can fire weapons that can destroy an entire planet's ecosystem or unleash torpedoes that can accelerate the fusion reaction within a star until it prematurely reaches supernova millions of years prior to its normal development would dictate, the horrors of war are beyond all reckoning.

Despite the inevitable death and destruction that war brings, it can nevertheless have a stimulating economic effect that can spread across entire systems as planets scramble to produce or purchase the materials they need to maintain their war efforts. Traders and smugglers can find a healthy business moving a variety of cargos through restricted space. If a war goes on long enough and becomes costly enough, some governments may be unable to replace lost ships, and they may instead hire freelance starships to take a variety of roles within their navy. Although many privately owned starships are inappropriate for direct combat duty without significant modifications, exploration, transport, and even medical ships may be required as ships previously assigned to those functions are pressed into combat duty. Even if only serving the war effort for a single encounter, a large-scale battle can present a starship's crew with a sense of the bigger picture in galactic events.

Less conventional encounters using war as a backdrop could involve characters working in opposition to the war effort, perhaps as agents of some third party. Criminal organizations may find that a protracted war effort begins to negatively impact their profits, philanthropic organizations may be opposed to the conflict on philosophical grounds, or intergalactic corporations with holdings in the domain of both feuding parties may wish to protect their assets from potential destruction.

Privateers and Press Gangs

Privateers and press gangs (euphemistically described as conscript training vessels) have their place in galactic affairs. Times of war often cause shortages on both sides, particularly if the conflict is a lengthy one of attrition. In such cases, it's not uncommon for one or both sides to hire on privateers to supplement their supply lines with materials seized from a list of legitimate targets. These target lists are typically restricted to the enemy, their allies, and any corporate entities supporting the opposition more substantially than the privateers' sponsors. Depending upon the alignment of the sponsor, however, the privateers may be unleashed on any ship that contains resources that could be beneficial to the war effort.

Privateer encounters typically fall under one of two categories. Legitimate privateers can serve as a reminder to the crew

of starships that war is a vast unpleasantness that impacts even those with no involvement with either side. A privateer encounter can be used as a gateway tool to alter the course of a campaign, involving the players' characters and their ship in the conflict in whatever capacity the campaign demands. While this experience can be as noble as required, it can also be a terrible and scarring experience, as some privateers are little more than pirates with a polite name attached to describe their activities. In these instances, the reality of war is again reinforced to those who exist beyond it.

In ancient times, press gangs were groups of pirates or other nefarious sailors who kidnapped innocent bystanders and forced them to serve alongside them aboard their ships. This premise lives on in the space age, although it's far less common due to the simple impracticality of the entire affair. While unwilling captives aboard a starship cannot hope to escape their containment, there are thousands of ways for such individuals to seek revenge against those who hold them, through sabotage, working slow, being obnoxious, or otherwise resisting the conscription. Although such an act would likewise complicate the life of the captive as well, the risk of unruly captives is enough to discourage most ship captains, particularly when there are any number of beings willing to serve a tour of duty on board a starship for little else than the opportunity to escape their home world and explore the galaxy at large.

Despite the impractical nature, there are mercenary bands, pirate groups, and even planetary governments who are so desperate for new soldiers or crewmembers that the practice of conscripting the unwilling into their service is not unheard of. It's necessary for training to be an expedient affair for something of this nature, obviously, or else it would prove more timely to simply clone or engineer new soldiers and crew. In the interests of speed and convenience, many large agencies that require conscripts employ vessels for just this task, known as conscript training vessels. These ships are usually retrofitted bulk freighters or other ships that cannot be used for a more military function, thus preventing further loss of resources on the front line. The ships are equipped with extensive training equipment and often a significant amount of subliminal conditioning devices. Conscripts are sent through an exhausting training regimen at threat of terrible punishment if they fail to comply. Those who do as they are ordered are rewarded and reassured that after a brief tour of duty, they will be returned home along with considerable compensation for their time. This is rarely the case, but it's sufficient to motivate a surprising number of conscripts into compliance. There is a significant percentage of washouts or people who die during training, of course, but the success rate is sufficient to warrant continuing the process. The staff of such vessels are usually comprised of castoffs from the regular military (or whatever other agency is maintaining the vessel) and those individuals who are too cruel, too injured, or otherwise inappropriate for regular duty. These frustrated individuals find trainees the perfect outlet for their anger.

Players' characters conscripted into service will have considerable amount of work ahead of them. Surviving the process is merely the first step, followed by escaping from the vessel and then reacquiring their own vessel (assuming it still exists) or obtaining a new one. From that point, there are any number of directions that the campaign could take, changing the scope and direction of the game thus far completely. A fugitive campaign, for instance, would require an ongoing current of desperation and paranoia, wherein the characters could rely on nothing except for their skills and equipment, fleeing across the galaxy from angry forces that wish to bring them to some twisted form of "justice."

Galactic Customs Official _

Agility 3D+2, firearms 4D+2, dodge 4D+1, melee combat 4D, Strength 3D, Mechanical 2D+2, Knowledge 3D, bureaucracy 4D, security regulations 4D+1, Perception 3D, investigation 3D+2, search 3D+1, Technical 2D+2, security 3D. *Move:* 10. *Strength Damage:* 2D. *Fate Points:* 0. *Character Points:* 2. *Body Points:* 13/ *Wound levels:* 2. *Equipment:* blaster pistol (damage 5D); body armor (Armor Value +1D).

Commerce and Recreation

Starships are expensive to purchase, expensive to maintain, and extremely expensive to repair. Choosing a spacer's lifestyle requires a constant source of incoming cash flow, a feat that can prove difficult given the ever changing political and economic landscape of the galaxy. Fortunately for spacers, there is a seemingly endless variety of jobs to be done, required by an infinite array of individuals, groups, and entities throughout the known universe. The "Criminal Enterprises" section earlier in this chapter details several such tasks that are somewhat less than legal, but there are an equal number, if not more, of perfectly legal and legitimate enterprises that can be used to fuel the adventures of any starship crew.

Customs Officials

The bane of entrepreneurs both legitimate and illicit, the customs official is a fixture in starports throughout the known galaxy. Theirs is the thankless, endless, profitless duty of ensuring that the thousands of cargo manifests that pass through their assigned sector each week are accurate descriptions of the cargoes that are being transported, and that no illegal or restricted substances are brought into or out of their designated areas. It's a monotonous job, one without any particular reward other than the fleeting sense of a job well done or, for those who crave excitement, the constant threat of angering dangerous individuals who may attempt to kill them for merely doing their job.

Custom officials most often appear in an encounter as a foil for the characters. Regardless of whether or not the characters are transporting illicit goods, an encounter with an overzealous customs official can allow even the most straight-laced characters to experience persecution as if they were dastardly criminals. Of course, if the characters are dastardly criminals, it makes such an encounter all the more appropriate. Even more entangling, the characters could encounter a customs official who is looking for a bribe, or one who seems completely disinterested in his job. While the first has obvious potential for encounters, the

One of the heroes has acquired her own ship and decides to go into business for herself as a free trader, roaming the galaxy, seeking new and exotic cargoes to sell at grossly inflated prices. The rest of the characters sign aboard as crew or fellow entrepreneurs. They travel to distant worlds — some settled, others only recently discovered — to find cheap commodities that might fetch hefty prices in more civilized systems. Although everyone hopes to make a huge fortune off one cargo run, they inevitably spend their time chasing down worthless deals, repairing old machinery on their ship, avoiding competition from large trade organizations, explaining strange merchandise to suspicious customs officials, and scrambling to make ends meet. Some free traders eventually turn from honest transport jobs to more lucrative (and riskier) smuggling assignments.

Adversaries and Allies _

Free traders have many enemies. Gamemasters can choose one or several from this list, developing each with resources of their own (ships, mercenaries, bases) and a primary reason to harass the heroes:

> competing shipping corporations seek to shut down small operators, but not before they cash in on their remote commodities sources and other markets

> customs officials constantly suspect free traders of dealing in stolen or illegal goods, and when they don't find any, manufacture excuses to fine them or tax their legitimate cargo

> some pirate bands prey on free traders assuming they're cashing in on some newfound goods from an exotic world

> crime syndicates seek to collect on loans made from credit-hungry free traders, either in cash or illicit favors, and often send bounty hunters after those who fail to cooperate

> rival free traders and smugglers seek to drive off other small-time competition, sometimes resorting to dire and underhanded measures

Most free traders must depend on themselves for survival, but some groups occasionally offer aid:

> petty nobles who depend on the heroes to provide valuable goods and services

> entrepreneurs who sell commodities free traders import

> oppressed natives who depend on trade with more civilized worlds to improve their standard of living

> starship mechanics who rely on the heroes as regular customers

> scouts who chart previously unexplored regions of space with potential for new commodities and markets

Starships _

A free trader campaign centers on the freighter the heroes use to transport cargoes. Develop some background to explain how the captain acquired his freighter (the "Your Own Ship" section in this chapter offers several ideas). Decide with the players what kind of ship best fits their characters' needs. Make sure it has adequate cargo space, shields and weapons to defend itself, and accommodations for all the heroes. The light freighter described in the "Advanced Starship Design" chapter provides a basic cargo vessel well-suited to free traders (the characteristics also appear on page 118 of the *D6 Space* rulebook). More ambitious characters might wish to fly a larger freighter on a capital ship scale. Although such bulk transports have superior cargo capacity, they also require a larger crew, more armament, and more expensive costs for overhead. Gamemasters should spend some time with players before beginning a free trader campaign to design a ship that's right for everyone.

Support Locations _

While the heroes' freighter serves as the campaign's primary location, it's flexible enough to take them to innumerable worlds to carry out trade. Gamemasters should still develop several stock settings on which the characters can rely.

Create at least one safe haven where the characters can flee to resupply, recover, and repair their ship. Remote or secret locations work best. The haven might consist of a friendly docking bay in a vast starport whose proprietor owes them a favor. Their wealthy patron might offer one of her remote estates for their use in emergencies. The characters might have prestocked a bolt-hole on some isolated, uncharted world unknown to the authorities. Gamemasters should use this location as a story element beyond providing refuge from enemies; keeping its existence a secret and otherwise protecting it for future use could serve as the goal of an adventure.

The heroes visit numerous ports in the course of their entrepreneurial activities. Gamemasters shouldn't feel they must detail every one, but they should have some consistent notes about the most-frequented starports. What planetary authorities administers security and customs? What are some key businesses and contacts the characters can use in port? What can they profitably buy and sell there? Where do they stay overnight, take their meals, and find recreation? Each starport should have its own character. Some might strain under the iron fist of the local tyrannical government, while others could have the atmosphere of a huge, chaotic party. For some ideas on making notes about planets and starports, see the "Sample Planet Log" sidebar on page 13.

second could at first seem a tremendous relief to traders, only to become a mixed blessing when the official's superiors reprimand or dismiss him outright and begin to review his most recent inspection logs. Despite the possibility of not having committed a crime, the characters' ship could suddenly become the center of a complex power struggle within the planetary customs department, a situation that cannot possibly work in their favor.

For variation, one might consider the possibility of an encounter wherein, as a favor to a friend in the office or for another reason, the characters taken on the roles of custom officials. For

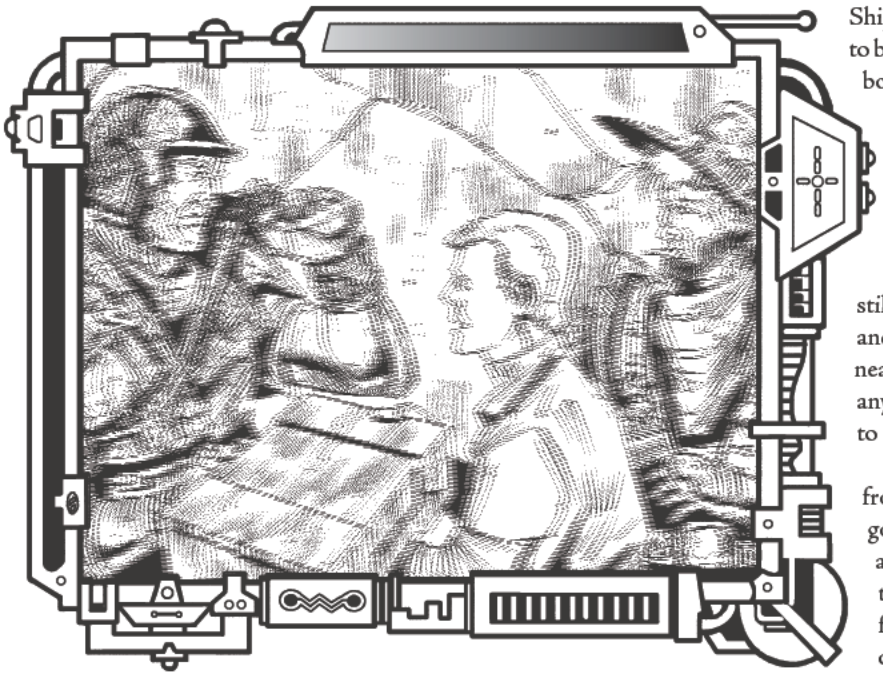

questionable characters, this is an excellent opportunity to see the other side of how the law operates. For legitimate traders, it may simple by an opportunity to experience the enormity of the task that officials face. Given that they will almost certainly have a negative opinion of custom officials, as the vast majority of traders do, this can be a chance to steer the party in a direction they may never have attempted.

Intergalactic Bazaars

The vast majority of all planets, star systems, and space stations closely supervise or tax cargoes that are traded or purchased while using their starport facilities. On larger cargoes, these taxes are usually not enough to substantially impact the profit margin for either party involved. A certain subset of traders, however, prefer to carry large amounts of cargo broken into much smaller lots, and conduct multiple deals in a single location. Fortunately for such traders, most systems and governments make allowances for this manner of business in their tax and tariff laws, protecting what basically amounts to small entrepreneurs from fees designed to regulate much larger corporations. Some systems, however, do not have laws that recognize the difference in such matters, and they tax each individual transaction. Legal entanglements of this nature cripple small traders, completely eliminating their profit margin to the point where it actually costs them money to conduct business in certain systems and closing entire markets to their goods and services. To counteract this unfortunate legality, certain trade confederations and merchant guilds maintain intergalactic bazaars in open space near to but technically outside of systems that practice such draconian trade restrictions.

Intergalactic bazaars, sometimes referred to by critics as "intergalactic bizarres," are truly a sight to behold. The agency or individuals sponsoring the event tend to bring in a handful of large, bulk cargo freighters with most (if not all) of their holds completely empty but pressurized and supplied with life support. Ships arriving in the area pay a reasonable fee to bring their cargo (or at least a manifest) on board to conduct trade with other similarly minded merchants. Starship crews who prefer more privacy in their business dealings may dock with one another as they see fit, or travel from ship to ship via environmental suits. Those who do not come aboard the bulk freighters may still pay the fee to have their cargo manifest and prices broadcast by the sponsor to all nearby ships on a secure channel, notifying any potential customers of what they have to offer for sale.

These large scale gatherings are typically frowned upon by most planetary or system governments, but those who organize them are careful to remain outside the jurisdiction of such agencies, and the problem is far too insignificant to draw the attention of any galactic authority. Pirates are a concern, of course, but between the security forces the hosts usually have on hand and the tendency of small, independent starships to flee in all directions at the sight of a pirate cruiser discourage most pirate groups. As a result, an intergalactic bazaar can be a surprisingly calm and enjoyable environment, and those who disrupt it quickly find that everyone will turn on them in an instant. Somewhat understandably, no one likes the economic downturn that crime and violence brings to such locations.

An encounter with an intergalactic bazaar could just as easily serve as a bit of comic relief as for serious trading business. A vast star field with ships arrayed in a passable grid is a powerful visual image that can entice players with a simple description. Such bazaars are full of quirky personalities that are only interested in the next sale and how to convince their customer that their merchandise is the finest. Free-wheeling hucksters with dank, cramped ships filled to the brim with all manner of curiosities are the order of the day for such an encounter. Creating an atmosphere of exotic, questionable goods is a simple affair. Add to that the possibility of a unique chase scene, one involving the characters pursuing or being pursued while outside their starship in traditional environmental suits, and the scene takes on the feel of a frantic Old World marketplace, complete with a lengthy vehicle chase.

Free Trade Zones

Intergalactic trade laws can be an extremely complicated affair, what with tariffs, taxes, and tracking systems that can involve multiple planets and dozens of governments. Inexperienced starship crews may discover that without proper planning, their profit margins are consumed entirely by the fees and penalties they incur in transporting cargoes across systems. This economic phenomenon has not gone unnoticed by entrepreneurs and has given rise to the notion of free trade zones. These zones tend to be highly discouraged by most governments, but enterprising systems with an eye for bringing in tourism and business persist in

the practice. The premise is that entire systems can be designated a tax-free, tariff-free zone wherein any two parties can conduct private transactions without any interference from government personnel. This type of arrangement is attractive to all manner of individuals, both legitimate and illegitimate. Criminals can make exchanges without concern for customs officials interfering in their business, and corporations can make deals without allowing governments to cut into their profit margins. With the new cargo secured and possession clearly indicated through the proper documents (which free zone personnel are all too happy to provide for a small fee), the transaction is completed and everyone leaves content — at least most of the time.

Surprisingly, free trade zones are relatively crime-free environments. There are a vast number of criminals, to be sure, but few wish to risk losing the privileges they enjoy in such a place by turning their craft against their hosts. Considering the amount of money such systems tend to make on inflated prices for food, lodging, and starport fees, money that they turn and reinvest in security, the prospect simply is not worth the risk.

The concept of a free trade zone is one that has enormous potential for encounters. The most obvious use would be as an attractive and recurrent destination of a starship crew that plies a frequent trade as smugglers, couriers, or independent traders. For such a group, the zone can be used to capture any number of different atmospheres, from the hectic trading atmosphere of New York's Wall Street to the frantic, free-wheeling chaos of an open air market in the innermost regions of Singapore. It can be a bewildering environment for characters, and one a gamemaster can use to introduce new contacts, employers, or crewmembers without great difficulty. Properly utilized, these zones can become an enjoyable fixture in a campaign, and one that players look forward to revisiting as the encounters staged there can be quite a departure from the normal emptiness of space and the harassment by custom officials, law enforcement, and government official of all types.

On the other hand, a free trade zone can serve an entirely different purpose for other types of characters. Law enforcement personnel traveling the galaxy in search of their prey can find the zones extremely frustrating and challenging, given a free system's tendency to avoid entanglements or dealings with outside law enforcement whenever possible. Free systems allow known criminals to walk openly in berths directly adjacent to those occupied by the sector rangers who so frequently hunt them. This is accomplished by an arrangement of system laws commonly known as "active morality laws." These laws are the subject of an ongoing, seemingly endless galactic debate regarding their legality, but the essence of their content is that no one can be arrested for nonviolent crimes in a free trade zone unless they are in the act of committing them at the time of their arrest. So long as criminals are careful not to commit any larcenous acts during their visit to the zones, they cannot be arrested by off-world law enforcement agencies.

Recreation

Sporting events in one form or another are wildly popular on almost every planet in the galaxy. Competition is a favored pastime of many alien races as well as Humankind, and the gradual merging of cultures can create dozens of new sports as existing sports are combined or adapted to new environmental conditions and alien physiques. One type of sporting event that remains consistently popular throughout countless systems is that of recreational starship piloting.

The first and most popular starship sport is that of racing. There are dozens of circuits that have races in every condition imaginable scattered throughout the galaxy. Asteroid belts are a popular location for such races, as are the tumultuous atmospheric condition of large, storm-covered planets. Obviously, races of this nature can be exceptionally dangerous, but most reputable circuits maintain a large number of small, fast ships that serve as rescue craft for the inevitable accidents. Even so, there are a substantial number of deaths, and there is always a movement by activists to have the races outlawed. Ironically, the illegal racing circuits that might go unnoticed by the same activists have a dramatically higher mortality rate, but they have far fewer protesters and generally seem to be less objectionable to most fans and observers. This is most likely because the indi-

Adventure Hooks: Free Traders _

Special Order: A wealthy aristocrat hires the heroes to acquire a laundry list of diverse items found on several different worlds. They might be medicinal, technical, or artistic in nature. As they begin collecting the goods, the characters realize another group of traders, bounty hunters, or commandos also seeks to collect the same items. In some cases, the heroes must directly confront one or more of these factions for possession of the sole item on a world. They might also try deducing why their patron wishes to collect this odd assortment of materials — are his intentions purely innocent, or is he pursuing some sinister agenda that might affect the course of politics and trade in this sector?

Blockade Running: A merchant promises the heroes an extravagant commission (probably enough to pay for their ship or some other debt) to deliver a perfectly legal commodity to a world currently under blockade by invading forces or military vessels enforcing some punishment against the planet. They heroes must avoid heavily armed and aggressive blockade craft, plus ground units occupying the starport. What should they do when they find out occupational troops have imprisoned their buyer — who has their commission — and impounded his warehouse?

The Red Box: A mysterious client pays the characters an advance, and promises them a vast sum later, to deliver a large red crate intact and unopened to a distant world. They forfeit the sum if they open the crate or allow it to sustain any damage. The challenge comes when they discover several groups desperately want the box: crime syndicates, pirates, bounty hunters, government agents, or religious fanatics. The heroes must deliver the crate to their client's vaults before these factions take drastic measures to grab the box for themselves.

Space Sport Pilot _

Agility 3D, dodge 3D+2, firearms 3D+1, Strength 2D, Mechanical 3D+2, gunnery 4D, navigation 4D+2, piloting 5D+1, Knowledge 2D+2, scholar: racing circuits 3D, streetwise 3D+2, Perception 3D, Technical 3D+2, flight systems repair 4D+1. *Move* 10. *Strength damage:* 1D. *Fate Points:* 0. *Character Points:* 3. *Body Points:* 13/*Wound levels:* 2. *Equipment:* heavy enviro-suit; small modified starship; laser pistol (damage 4D).

viduals who sponsor such races have a markedly lower tolerance for disturbances — those who disrupt them tend to disappear. Regardless of whether a race is legal or illegal, there is rarely a shortage of potential participants. The prizes for such races are simply too great for daring pilots to ignore.

More dangerous starship sporting events range from live-fire targeting exercises (wherein daring crews defend themselves against drones firing powerful but non-lethal energy blasts in an attempt to disable the crew) and literal death matches (where crews are pitted against one another).

The targeting exercises take two forms: (1) multiple ships are attacked simultaneously, and (2) single ships are assaulted separately and timed. In each event, small drones are sent in ever increasing waves against the participating starships until they are finally successful in disabling them. The vessel that endures the assault the longest is considered the victor. Although there have been instances of disastrous system failures resulting in contestants' or even spectators' deaths, this is a relatively benign sport with little risk. This is far from the case with the (generally) illegal death matches.

There is a subset of any society that craves entertainment at any cost, with more and more exciting events required to stimulate their jaded sensibilities. For individuals such as these, there are many criminal entrepreneurs eager to capitalize on this desire. Whether in the deepest regions of space or the most turbulent atmospheres of uninhabited planets, various underground producers hold a number of exceptionally destructive competitions each year. Each crew pays a small fee to enter and has their ship carefully examined by circuit personnel. The results of these examinations are kept private, but the gambling odds are often quite telling in that regard. The crews are then given coordinates somewhere in the area, usually referred to as the arena, and told to wait for the signal to begin. Once the signal is broadcast, the crews' intent is to destroy as many other competitors as possible. Each kill earns a fixed reward, and these rewards are passed on to any ship that kills another. Any ship that flees the arena is disqualified, and a kill is credited to the last ship to attack that ship. The surviving ship, or the last ship to remain within the arena, is also awarded a percentage of the house's take on all gambling. Obviously, this can lead to tremendous profit for skilled ships. There are more repeat competitors than might be expected, as canny competitors will flee the arena when their survival becomes untenable, allowing them to enact repairs after the event and enter again once they have corrected whatever weaknesses brought about defeat in the first place. Other ships may only be disabled during the conflict, and circuit organizers frequently conduct debris examinations following the event's conclusion. Granted, the primary purpose for these examinations is for salvage, but there have been many occasions during which the salvage crew has pulled survivors from such ships, some of whom have gone on to repair their disabled vessels and compete again.

Starship recreation can be used as single encounters or entire campaigns. These events can provide additional income for starship crews who have the skill, opportunity, and need for such things. Such encounters can be an opportunity for a crew to exercise skills that may only normally be called upon in times of duress, and they can allow players to showcase their characters' favorite skills and specialties. Campaigns can be constructed around similar premises, should the players desire an opportunity to create characters a bit outside the normal templates. Professional athletes as space-based characters is not a niche that has been explored a great deal in fiction or film, and can be a chance for a role-playing group to explore a wildly different element of their favorite campaign setting.

Planet Creation _

What's in this Chapter

This chapter offers a fast planet creation system for those who intend to do plenty of planet hopping. The system provides just enough details to give a generalized overview of the current state of the planet. Gamemasters should add information on its history, cultures, customs, other planets in the system, and so on, if the players' characters intend to stay there for any length of time. Chapter 1 of the *Gamemaster's Screen and Aid* booklet contains ideas for adding depth to the world. Pages 41–42 of the *D6 Space Rulebook* offers suggestions on fleshing out alien characters; that chapter also has some sample races.

Creating a Planet

There are several key aspects of a planet and its people described here, each with an associated table. Use the tables to randomly determine what the planet is like, or simply pick what seems appealing. Record decisions on the "Planet Design Log" included at the end of this book. Also included on this log are places to put down times to other planets and various costs associated with visiting the planet.

When an aspect suggests rolling twice on the tables, either come up with a creative reason why the duplicated entries coexist, or discard the duplicate and reroll.

Do not include the Wild Die when making rolls on these tables.

Number of Objects in the System

Although these guidelines deal with one system, it can provide flavor to know how many other bodies there are in the system. Roll 3D to figure out how many major objects there are in addition to the main planet and the sun. If the number is greater than seven, roll 1D to determine how many of those bodies are asteroids belts or comets (gamemaster's choice).

Number of Moons

Roll 1D and subtract 1 from the result to figure out how many large chunks of rock orbit the main planet. The fewer the moons (aside from zero), the bigger they are.

On a result of five, either the moons are very small or the planet has a ring around it.

Moons create tides, and, by reflecting the sun's rays, they serve as a source of light at night. They can also influence the behavior of creatures living on the planet.

Atmosphere

Most planets of significant size have some kind of atmosphere, though a large passing body can rip it away. Native species can breathe their own atmosphere, but they will have trouble in other environments. Roll 1D on the table to determine the composition

Result	Atmosphere
1–3	Nitrogen-oxygen mix, breathable by Humans and similar species
4	Contains elements harmful to Humans and similar species if exposed to them over long periods of time
5	Contains elements harmful to Humans and similar species if exposed to them over short periods of time
6	Environmental suits required by Humans and similar species to survive on this planet

Hydrosphere

This aspect shows how much of the planet is covered in liquid. If the atmosphere is harmful to Humans and similar species, then the liquid is probably not pure water — the water might be contaminated with other substances or it might be even more deadly, such as lava or ammonia.

Result	Hydrosphere
1	Arid: Little or no standing liquid
2–3	Dry: Some standing liquid
4–5	Moderate: Has many oceans, lakes, and rivers
6	Saturated: Little or no dry land

Gravity

This aspect indicates how much pull the planet has on things near its surface. Roll 1D on the chart.

Result	Gravity
1–2	Light: Roll 1D, add 1 to the result, and divide by 10 to get the gravity value
3–5	Standard: Roll 1D and add 0.7 to the result to get the gravity value
6	Heavy: Roll 1D and add 1 to the result to get the gravity value

Length of Day

For most planets, this method works adequately to determine the time it takes for the planet to rotate on its axis. Gamemasters may increase or decrease it as appropriate for the planet and may even change the number of seconds or minutes in an hour. Roll 1D on the table.

Result	Length of Day
1–2	2D plus 10 hours
3–4	1D plus 20 hours
5	1D plus 25 hours
6	1D plus 30 hours

Length of Year

This simplistic method works well for figuring out long it takes for the planet to travel around its primary. Roll 1D on the table.

Result	Length of Year
1	1D x 15 plus 75 local days
2	1D x 15 plus 150 local days
3	1D x 15 plus 225 local days
4–5	1D x 15 plus 300 local days
6	1D x 15 plus 375 local days

Common Terrain

This aspect reveals the dominate terrain on the planet, though certainly not the only one. The exact nature of the terrain is affected by the hydrosphere, length of day, and gravity, among other factors. A dry world with a long day and high gravity is less likely to exhibit a jungle or wetlands terrain than a moist with an average day and low gravity. Gamemasters should adjust the result based on previously determined factors, if desired.

At minimum, roll 2D on this chart, though gamemasters may wish to roll twice on the table to get primary and secondary terrains. As this is only a sampling of possible surface conditions, gamemasters may feel free to substitute any conditions that they desire for the ones listed here or include a subtable under the "Other" option on which to roll.

Result	Terrain
2	Desert/tundra
3	Volcanic
4	Mountainous
5	Artificial, such as domed cities or sprawling cities containing many buildings
6	Forest
7	Plains
8	Jungle
9	Wetlands
10	Ocean
11	Glacier
12	Other (specified by the gamemaster)

Planet Establishment

This aspect gives a broad overview of where the planet's citizens came from, if there is any sentient species there. Roll 2D once on this table.

Result	Level
2–3	No sentient species, though there may be ruins of an ancient civilization or untapped natural resources; skip the rest of the aspects; not likely to have a spaceport
4	Cataclysmic changes dramatically altered the society; the society may still be in danger from a recent disaster or it may be recovering from a disaster in the past
5-6	Dependent colony established by another, more developed planet or corporation; trade may be restricted to sponsor and may have to follow sponsor's laws
7	Settled by another world and then abandoned; some memories of more prosperous times, but may have devolved to barbarism

8-9	Independent colony that, though established by another planet or corporation, no longer has ties to the sponsor
10	Important military installation
11–12	Homeworld of a species

Government

This aspect suggests the dominating political authority on the planet. These are only a few possibilities. Roll 2D once on this table.

Result	Government
2–3	Anarchy (individual rights above all else)
4	Military
5	Alliance or federation of several families, family groups (tribes), nations, corporations, etc.
6	Bureaucracy
7	Democracy: Roll 1D. If the result is odd, then it's participatory (all citizens have a say in all issues); if the result is even, then it's representative (citizens elect officials to manage policy).
8	Run by a single corporation, guild, religion, or professional organization
9–10	Single person: Roll 1D. If 1–2, ruler takes power by force (dictator); if 3–4, ruler determined by series of trials or tests; if 5–6, ruler determined by heredity (monarch)
11–12	Criminal

Regulations

There are two parts to this section. In the first, the gamemaster determines whether the government is informal, intolerant, or moderate, which can affect how much they enforce their laws. Use the guidelines on pages 10–12 to decide on infractions and their consequences. In the second, the gamemaster selects unusual laws that the system has, if any.

Roll 1D on the first chart and 2D on the second.

Result	Law Enforcement Level
1–2	Informal (this government considers infractions to be "errors of judgment" requiring simple reminders rather than strict punishment; treat all misdeeds as one level less than their listed ones)
3–4	Moderate (this government attempts to make the punishment fit the crime; it has no enforcement modifier)
5–6	Intolerant (this government strictly controls those within its sphere of influence; treat all misdeeds as one level greater than their listed ones)
Result	Unusual Regulations
2–5	Technology/weapons restriction (a special permit is required to have certain kinds of technology or weapons; the gamemaster decides what is restricted)
6–7	Alien prejudice (misdeeds by anyone not a citizen of the government's sphere of influence are treated as one level greater than normal)
8–9	Material prohibition (one or more common items — such as particular kinds of food, metals, plants, sculptures, technology, weapons, etc. — are considered illegal; transporting or selling them is considered a severe offense; the gamemaster selects the category)
10–12	Unbelievers prohibition (anyone who does not proscribe to a particular set of religious, moral, political, or economic beliefs or philosophies is run out of the area)

Technology Level

These broad categories indicate the level of technology and can dictate the kinds of items visitors could find on the planet. Realize that this is the planet's average current technology level. It may have been at a higher level in the past, or it may be just inventing technology that puts it at the bottom of the level. Roll 1D once on the chart.

Result	Technology Level
1	Low (simple tools, basic agricultural methods, slow transportation network at most, etc.; not likely to have a spaceport)
2–3	Mid (harness wind, water, wood, etc. to provide energy for manufacturing, heating, running devices, etc.; basic rocket technology; well-developed transportation and communications networks; etc.; not likely to have more than a basic spaceport)
4–6	High (space travel, miniaturized machines, artificial intelligence, cybernetics, etc.)

Imports and Exports

This aspect reveals the most common industries and activities are on the planet. Roll 2D twice on this chart to find the major and secondary exports. Roll 2D twice again to determine the major and secondary imports. Additionally, gamemasters may substitute other options for ones listed here.

Result	Industry
2	Administration (government or corporate headquarters)
3	Entertainment
4	Research and prototype development
5	Luxury goods (art, jewelry, finished gems, spices, liquor, food delicacies, etc.)
6	Processing of raw materials into intermediary components (vehicle parts, weapon components, equipment parts, cloth, chemicals, etc.)
7	Manufacturing of finished goods (furniture, household goods, medicine, weaponry, vehicles, equipment, etc.)

8	Service (banking, legal, medical, financial, ship repairs, black market, etc.)
9–10	Natural resources (metals; minerals; logging; animals for fur, wool, or food; water; argiculture/fibers/foodstuffs; etc.)
11–12	Education

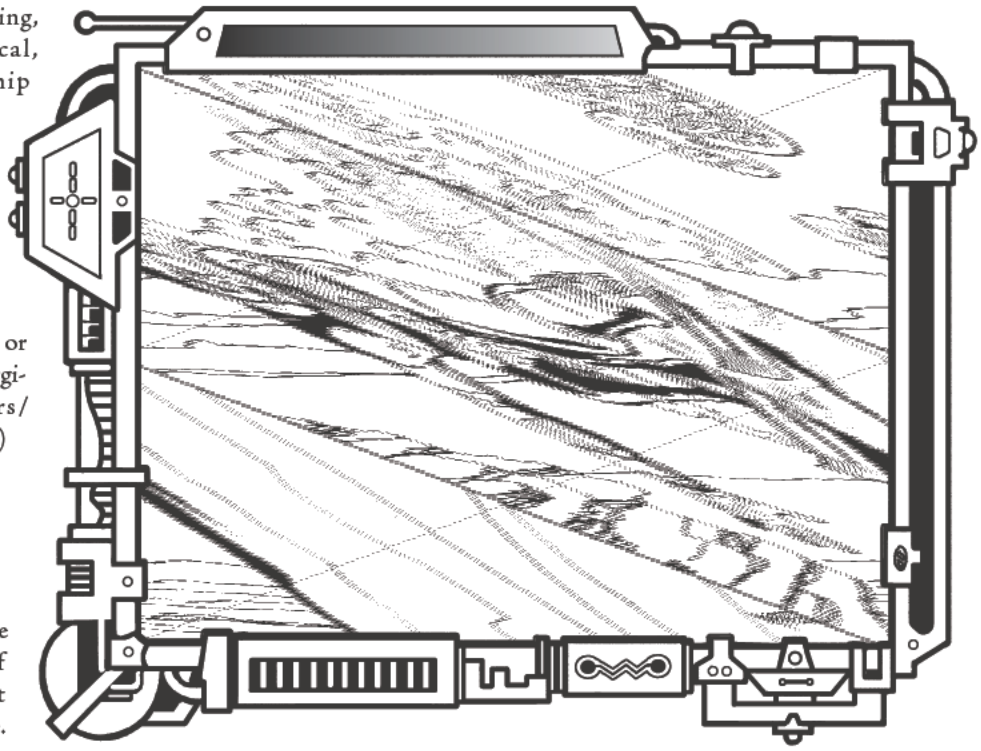

Population Numbers

Use this method to determine the total sentient population of a planet. Roll 1D on the first chart to get the base range. Then multiply that number by the value indicated by a roll of 1D on the second chart.

Result	Population Range
1	100
2–3	1,000
4–5	1,000,000
6	1,000,000,000

Result	Population Multiplier
1–2	1D
3–4	1D x 10
5–6	1D x 100

Spaceport

To determine what kind of services a planet can offer, use this aspect. Roll 1D once on the chart.

Result	Starport
1	None, requiring ships, if they come here at all, make their own landing fields on any large, open spaces
2	Basic, including a landing field, control tower, limited fuel supplies, and only the most common repair materials
3–4	Minor, including better versions of the features of the basic version plus more refueling and restocking options and a shipyard for minor repairs and modifications
5–6	Major, includes better versions of the features of the minor version; may possibly be a space station orbiting the planet or on a moon instead of a landing field on the planet

Proximity to Trade Routes

The proximity to the nearest hub world affects how easy it is to get to the planet. The closer the planet is to a major trade route, the more likely it is to have a higher technology. Roll once on the chart.

Result	Proximity
1	Off the common routes; minimum of 2D months of travel time from the nearest hub world
2–3	Backwater: routes have been plotted but aren't traveled much; minimum of 1D months of travel time from the nearest hub world
4	Minor: routes are well known, but the planet is distant from major trade routes; minimum of 1D weeks of travel time from the nearest hub world
5	Major: on a major trade route; minimum of 1D days of travel time from the nearest hub world
6	Hub: a planet where many trade routes converge

D6 Space Ships > Planet Design Log _

Name of planet: _____

Name of system: _____

Number of planets in system: _____

Number of moons around main planet: _____

Atmosphere: _____

Gravity: _____

Common Terrain: _____

Hydrosphere: _____

Length of Day: _____ Length of Year _____

Planet Establishment: _____

Government: _____

Common or Unusual Laws (see p. 10–12 of this book): _____

_____

Technology Level: _____

Imports: _____

Exports: _____

Approximate Population: _____

Spaceport: _____

Proximity to Trade Routes: _____

Travel Times to Various Planets

1. _____ 2. _____

3. _____ 4. _____

Costs

Port Fees: _____ Accommodations: _____

Good Meal: _____ Night's Entertainment: _____

Other: _____

Notes: _____

_____

_____

_____

_____

_____

_____

Accessing D6 Space Ships File 7 ...

D6 Adventure Conversion _

What's in this Chapter

For those who wish to add space ships and travel to their *D6 Adventure* campaigns, this chapter offers some guidelines.

Converting the System

Because the genre rulebooks are based on the same system, there's no need to worry about changing difficulties, modifiers, or the like. Design a ship works the same as described in this book, though gamemasters may wish to further restrict what's available to spaceship designers. Gamemasters may also wish to multiply the cost and the price difficulty by 2, 5, 10, or some other number, to reflect the lower availability of space-faring vehicles in most modern and near-future settings.

As the skills in both systems are generally not the same, this aspect of conversion requires the most work. Use the accompanying chart to determine the *D6 Adventure* skill most equivalent to the *D6 Space* skill. (The list contains only those skills referenced in this book.)

Note that some of the equivalent *D6 Adventure* skills indicate that a focus (listed after the slash) must be purchased. The focus costs the same as the full version of the skill, due to the highly technical nature of it. Gamemasters may choose to impose a less severe penalty on someone who has the basic skill but not the focused version of it, or they may choose to ignore the focus recommendation altogether.

D6 Space divides the *repair* skill into several categories. *D6 Adventure* gamemasters may require equivalent foci on *D6 Adventure* skills, or simply drop them under *tech* and *repair*. In specific: *Flight systems repair* skill deals with the ability to fix onboard systems, including communications, sensors, shields, engines, and the like. It does not cover the ship's weapons, armor, hull, or computers. *Gunnery repair* is needed for fixing ship weapons, while *armor repair* is needed for working on the hull and its armor. *Computer interface/repair* aids with the computers.

Skill Conversion _

D6 Space	D6 Adventure
astrography	scholar/stellar features and civilizations
comm	tech/communications equipment
flying/0-G	flying **or** acrobatics/0-G
gunnery	marksmanship/spaceship weapons
medicine	medicine
navigation	navigation
piloting	piloting/spaceships
sensors	tech/sensor equipment
shields	tech/starship shield use
interface/repair skills	tech **or** specific version of *tech* skill
repair only skills	repair **or** specific version of *repair* skill

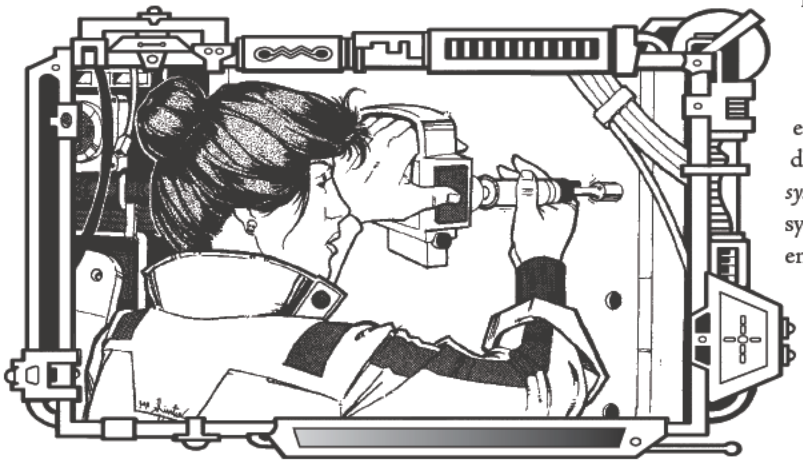

Name of ship	
Type of ship (ship role)	
Total number of crew	
Total number of passengers	

Instructions
For information on each module (including area units, mass, energy draw/generation, cost, and other details), see chapter 2 of this book. Round all fractions up. For starred entries, see the text for special information that may affect how you design your ship.
After each module is space for you to record the values for the modules you include in your vessel. The weapons are listed on one page, so that you may copy and include multiple versions of the sheet.

Life-Supporting Modules _ (pages 31–33)

Module	Quantity	Area	Mass (tons)	Energy Draw	Cost	# of People	Notes
Airlock, group							
Airlock, single							
Boarding tube (include storage area size and size when extended)							
Bridge, standard							
Duty station, standard (specify)							
Bridge, compact							
Duty station, compact (specify)							
Brig							
Bunks, communal							
Coldsleep module							
Hallway*							
Hydroponics* (4 units will feed 1 Human-sized person)							
Infirmary							
Laboratory							
Leisure room							
Lounge							
Medical bed							
Passenger seating							
Passenger seating, additional seating							
Room, one-person							
Room, two-person							
Workroom							

Food Processor Supplies _ (quantity of food is months times number of people who need to be fed; page 35)

Equipment	Quantity	Area	Mass (tons)	Energy Draw	Cost	Notes
Storage*						
Food, snack		—				
Food, standard		—				
Food, luxury		—				
Subtotals for this page						

Cargo Modules _ (pages 33–34)							
Module	Quantity	Area	Mass (tons)	Energy Draw	Cost	# of People	Notes
Bulk space							
Exoskeleton bay							
Hangar (1 small fighter)							
Launch bay (1 small fighter)							
Livestock bay (1 animal)							
Matter teletransporter							
Pod bay (1 escape pod)							
Vehicle bay							
Atmosphere _ (pages 34–35)							
Total number of people rooms can support (not total crew; round up)	—	—	—	—	—		
Atmosphere (quantity is months)		—	—	—			
Life-Supporting and Cargo Module Upgrades _ (pages 35–36)							
Upgrade	Quantity (per module)	Area	Mass (tons)	Energy Draw	Cost	Notes	
Comm skill bonus		—	—				
Gunnery skill bonus		—	—				
Navigation skill bonus		—	—				
Piloting skill bonus		—	—				
Sensors skill bonus		—	—				
Shields skill bonus		—	—				
Medicine skill bonus		—	—				
Repair skill bonus (specify skill)		—	—				
Repair skill bonus (specify skill)		—	—				
Other skill bonus (specify skill)		—	—				
Other skill bonus (specify skill)		—	—				
Cyber interface		—	—				
Autofunction program (3D each in two skills; specify skills)		—	—				
Autofunction upgrade (specify skill)		—	—				
Autofunction upgrade (specify skill)		—	—				
Luxuriousness (specify)*		—	—	—			
Luxuriousness (specify)*		—	—	—			
Luxuriousness (specify)*		—	—	—			
Subtotals for this page							

Weapons _ (pages 36–40)									
Type	Quantity	Area	Mass	Energy Draw (+1 per arc for swivel mounting)	Cost (+200 per arc for swivel mounting)	Fire Arc	Ammo	Range* (space units)	Damage
Ammo bay (holds 1 unit)									
Blaster cannon									
Blaster damage upgrade									
Blaster range upgrade									
Totals for blaster cannon									
Laser cannon									
Laser damage upgrade									
Laser range upgrade									
Totals for laser cannon									
Machine cannon									
Replacement ammunition									
Mine launcher									
Replacement mine									
Missile launcher									
Missile launcher range upgrade									
Totals for missile launcher									
*Missile Warheads**									
Passive Homing									
Active Homing									
Cluster*									
Nuke*									
Noisemaker*									
Sensor decoy*									
Point-defense gun									
Torpedo launcher									
Replacement torpedo									
Sensor probe launcher									
Replacement senor probe									
Tractor beam projector									
Tractor beam upgrade									
Totals for tractor beam									
Subtotals for this page									
Note: Duplicate this page for multiple banks of similar yet different weapons.									

Weapon Extras _ (page 40)							
System	Quantity	Area	Mass (tons)	Energy Draw	Cost	Damage Bonus	Notes
Fire-linking (per group of weapons)*		—	—	—			
In-System Drive _ (page 40)							
System	Quantity	Area	Mass (tons)	Energy Draw	Cost	Space Move	Notes
Basic drive							
Additional Move							
Total in-system space Move	—	—	—	—	—		
Atmosphere movement rate in kph (50 x space Move; see chart on page 43 to get kph)	—	—	—	—	—		
Maneuvering Thrusters _ (page 40)							
System	Quantity	Area	Mass (tons)	Energy Draw	Cost	Maneuver-ability	Notes
Upgrade		—	—				
Total in-system Maneuverability	—	—	—	—	—		
Interstellar Drives _ (page40_42							
System	Quantity	Area	Mass (tons)	Energy Draw	Cost	Drive Rating	Notes
Basic drive							
Increased rating							
Total interstellar drive rating	—	—	—	—	—		
Backup drive (uses same costs as basic drive)							
Total Energy Requirements _							
Energy draw of shields (if shields are desired; 1 per pip of shields)	—	—	—		—		
Energy draw total of all components included to this point (round up)	—	—	—		—		
Power Plants _ (page 42)							
Plant	Quantity	Area	Mass (tons)	Energy Output	Cost	Notes	
Main plant							
Additional energy							
Total energy output	—	—	—		—		
Subtotals for this page							

Power Plants (continued) _						
Plant	Quantity	Area	Mass (tons)	Energy Output	Cost	Notes
Battery backup						
Burst capacitor						
Mass Subtotals _						
Mass subtotal of all components included to this point (round up)	—	—		—	—	
Exterior _ (pages 42–45)						
Component	Quantity	Area	Mass (tons)	Energy Draw	Cost	Notes
Hull (quantity is Toughness)		—		—		
Atmospheric streamlining	—	—		—		
Landing gear	—	—		—		
Armor (quantity is die code)				—		
Shields (quantity is die code)						
Stealth option (quantity is bonus)		—	—	—		
Totals (do not count subtotals twice; round fractions up)	—					Notes
Other features (Disadvantages, Advantages, Special Abilities, gamemaster-created options, etc.)						
Scale (see charts on pages 45–46)						
Shape (circle one)	Cylinder	Ellipsoid	Spheroid	Wedge	Other	
Length						
Price difficulty (20 + cost total/10,000; round up)						
Current owner						
Background information and other details:						

D6 Space Ship > Freeform Ship Design Log _

Name: _____ Type: _____

Length: _____ Crew: _____ Passengers: _____

Scale: _____ Total Cost (new): _____ Price Difficulty: _____

Cargo: _____

Life-Support Supplies (length of time): _____

In-System Drive

Move (in space units): _____ Maneuverability: _____

Atmosphere Capability: _____

Interstellar Drive

Rating: _____ Rating of Backup: _____

Weapons

Type: _____ Damage: _____ Range: _____ Ammo: _____

Type: _____ Damage: _____ Range: _____ Ammo: _____

Type: _____ Damage: _____ Range: _____ Ammo: _____

Type: _____ Damage: _____ Range: _____ Ammo: _____

Type: _____ Damage: _____ Range: _____ Ammo: _____

Type: _____ Damage: _____ Range: _____ Ammo: _____

Type: _____ Damage: _____ Range: _____ Ammo: _____

Type: _____ Damage: _____ Range: _____ Ammo: _____

Type: _____ Damage: _____ Range: _____ Ammo: _____

Type: _____ Damage: _____ Range: _____ Ammo: _____

Type: _____ Damage: _____ Range: _____ Ammo: _____

Hull

Toughness: _____ Armor: _____ Shields: _____

Notes: _____

OPEN GAME LICENSE Version 1.0a

1. Definitions: (a)"Contributors" means the copyright and/or trademark owners who have contributed Open Game Content; (b)"Derivative Material" means copyrighted material including derivative works and translations (including into other computer languages), potation, modification, correction, addition, extension, upgrade, improvement, compilation, abridgment or other form in which an existing work may be recast, transformed or adapted; (c) "Distribute" means to reproduce, license, rent, lease, sell, broadcast, publicly display, transmit or otherwise distribute; (d)"Open Game Content" means the game mechanic and includes the methods, procedures, processes and routines to the extent such content does not embody the Product Identity and is an enhancement over the prior art and any additional content clearly identified as Open Game Content by the Contributor, and means any work covered by this License, including translations and derivative works under copyright law, but specifically excludes Product Identity. (e) "Product Identity" means product and product line names, logos and identifying marks including trade dress; artifacts; creatures characters; stories, storylines, plots, thematic elements, dialogue, incidents, language, artwork, symbols, designs, depictions, likenesses, formats, poses, concepts, themes and graphic, photographic and other visual or audio representations; names and descriptions of characters, spells, enchantments, personalities, teams, personas, likenesses and special abilities; places, locations, environments, creatures, equipment, magical or supernatural abilities or effects, logos, symbols, or graphic designs; and any other trademark or registered trademark clearly identified as Product identity by the owner of the Product Identity, and which specifically excludes the Open Game Content; (f) "Trademark" means the logos, names, mark, sign, motto, designs that are used by a Contributor to identify itself or its products or the associated products contributed to the Open Game License by the Contributor (g) "Use", "Used" or "Using" means to use, Distribute, copy, edit, format, modify, translate and otherwise create Derivative Material of Open Game Content. (h) "You" or "Your" means the licensee in terms of this agreement.

2. The License: This License applies to any Open Game Content that contains a notice indicating that the Open Game Content may only be Used under and in terms of this License. You must affix such a notice to any Open Game Content that you Use. No terms may be added to or subtracted from this License except as described by the License itself. No other terms or conditions may be applied to any Open Game Content distributed using this License.

3. Offer and Acceptance: By Using the Open Game Content You indicate Your acceptance of the terms of this License.

4. Grant and Consideration: In consideration for agreeing to use this License, the Contributors grant You a perpetual, worldwide, royalty-free, non-exclusive license with the exact terms of this License to Use, the Open Game Content.

5. Representation of Authority to Contribute: If You are contributing original material as Open Game Content, You represent that Your Contributions are Your original creation and/or You have sufficient rights to grant the rights conveyed by this License.

6. Notice of License Copyright: You must update the COPYRIGHT NOTICE portion of this License to include the exact text of the COPYRIGHT NOTICE of any Open Game Content You are copying, modifying or distributing, and You must add the title, the copyright date, and the copyright holder's name to the COPYRIGHT NOTICE of any original Open Game Content you Distribute.

7. Use of Product Identity: You agree not to Use any Product Identity, including as an indication as to compatibility, except as expressly licensed in another, independent Agreement with the owner of each element of that Product Identity. You agree not to indicate compatibility or co-adaptability with any Trademark or Registered Trademark in conjunction with a work containing Open Game Content except as expressly licensed in another, independent Agreement with the owner of such Trademark or Registered Trademark. The use of any Product Identity in Open Game Content does not constitute a challenge to the ownership of that Product Identity. The owner of any Product Identity used in Open Game Content shall retain all rights, title and interest in and to that Product Identity.

8. Identification: If you distribute Open Game Content You must clearly indicate which portions of the work that you are distributing are Open Game Content.

9. Updating the License: Wizards or its designated Agents may publish updated versions of this License. You may use any authorized version of this License to copy, modify and distribute any Open Game Content originally distributed under any version of this License.

10. Copy of this License: You MUST include a copy of this License with every copy of the Open Game Content You Distribute.

11. Use of Contributor Credits: You may not market or advertise the Open Game Content using the name of any Contributor unless You have written permission from the Contributor to do so.

12. Inability to Comply: If it is impossible for You to comply with any of the terms of this License with respect to some or all of the Open Game Content due to statute, judicial order, or governmental regulation then You may not Use any Open Game Material so affected.

13. Termination: This License will terminate automatically if You fail to comply with all terms herein and fail to cure such breach within 30 days of becoming aware of the breach. All sublicenses shall survive the termination of this License.

14. Reformation: If any provision of this License is held to be unenforceable, such provision shall be reformed only to the extent necessary to make it enforceable.

15. COPYRIGHT NOTICE

PRODUCT IDENTIFICATION:
Product Identity: The D6 System; the D6 trademark, the D6 and related logos; OpenD6 and any derivative trademarks; and all cover and interior art and trade dress are designated as Product Identity (PI) and are properties of Purgatory Publishing Inc. Use of this PI will be subject to the terms set forth in the D6 System/OpenD6 System Trademark License (D6STL).
Open Game Content: All game mechanics and materials not covered under Product Identity (PI) above.